canplas PLUMBING

Submittal Sheet

Part Description:

1-1/2" PVC WHITE DWV Sanitary Tee H x H X H

Part Number:

192151L

Approvals and Listings maintained by:
Canplas Industries Ltd
Canada: 1-800-461-5300 USA: 1-888-461-5307

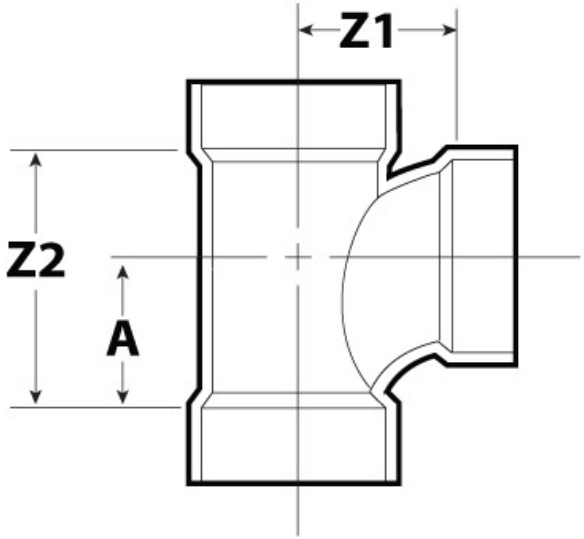

Part #	Part UPC	Colour	Size (inches)	Ctn Qty	Ctn Bar Code	Ctn. Wt (Kgs)	Ctn. Wt (lbs)	Skid Cubic (m)	Skid Cubic (ft)	Ctns/Skid
192151L	662671191373	WHITE	1-1/2X1-1/2X1-1/2	70	10662671191370	10.49	23.08	1.86	65.82	32

Dimensions (inches)

A	Z1	Z2
1.73	1.77	2.74