canplas PLUMBING

# Submittal Sheet

Part Description:

2"X 2" X 1-1/2" ABS DWV Single Long Turn Tee Wye

Part Number:

104320

Approvals and Listings maintained by:
Canplas Industries Ltd
Canada: 1-800-461-5300 USA: 1-888-461-5307

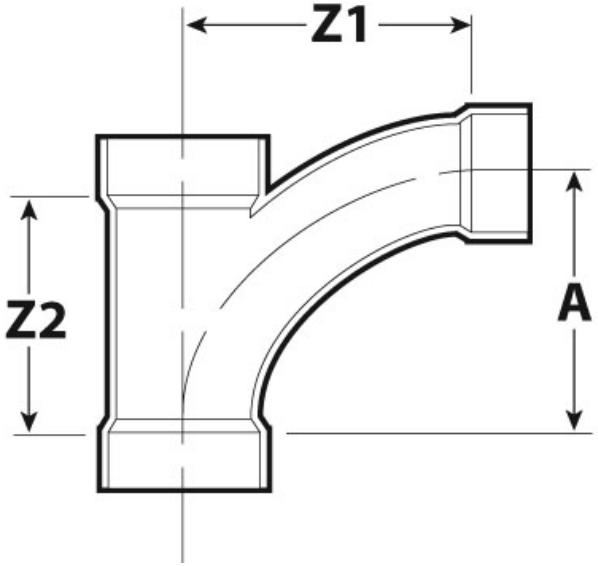


| Part # | Part UPC | Colour | Size (inches) | Ctn Qty | Ctn Bar Code | Ctn. Wt (Kgs) | Ctn. Wt (lbs) | Skid Cubic (m) | Skid Cubic (ft) | Ctns/Skid |
|---|---|---|---|---|---|---|---|---|---|---|
| 104320 | 662671108067 | BLACK | 2X2X1-1/2 | 20 | 10662671108064 | 4.07 | 8.95 | 1.79 | 63.37 | 48 |

## Dimensions (inches)

| A | Z1 | Z2 |
|---|---|---|
| 3.93 | 4.21 | 3.44 |