canplas PLUMBING

# Submittal Sheet

Part Description:

## 1-1/2" X 1-1/2" ABS DWV Swivel Tray (Strainer) Adapter with Gasket, H X Female Pipe Thread

Part Number:

## 103217

Approvals and Listings maintained by:
Canplas Industries Ltd
Canada: 1-800-461-5300 USA: 1-888-461-5307

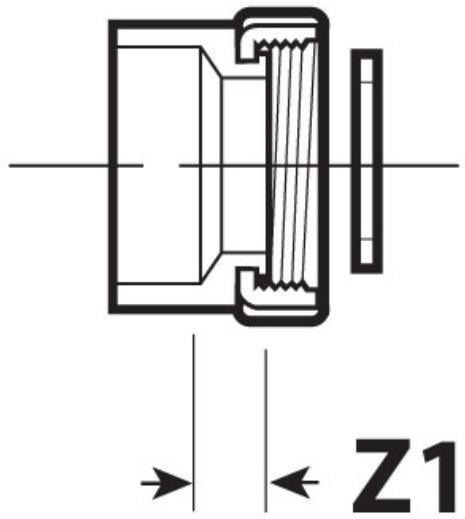


| Part # | Part UPC | Colour | Size (inches) | Ctn Qty | Ctn Bar Code | Ctn. Wt (Kgs) | Ctn. Wt (lbs) | Skid Cubic (m) | Skid Cubic (ft) | Ctns/Skid |
|---|---|---|---|---|---|---|---|---|---|---|
| 103217 | 662671102546 | BLACK | 1-1/2X1-1/2 | 100 | 10662671102543 | 3.99 | 8.78 | 1.79 | 63.37 | 72 |

Dimensions (inches)

Z1
0.47