MONTE CARLO

FAN COLLECTIONS

Owner's Guide and Installation Manual

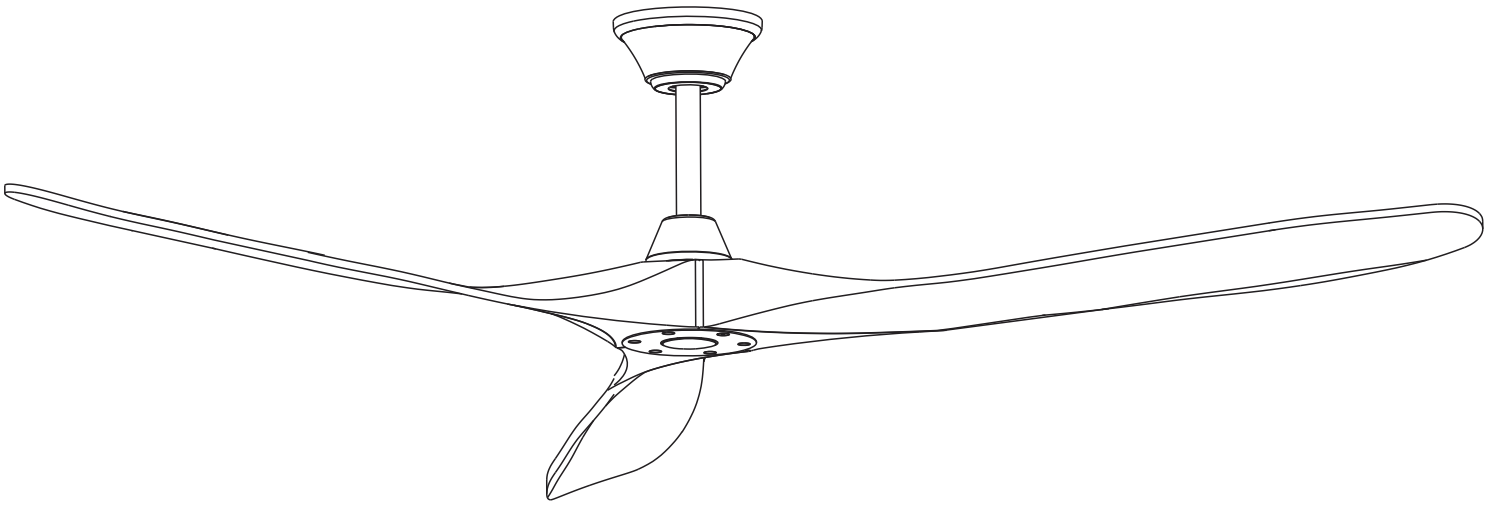

ENERGY STAR

3MAVR70XX Series Fan

CUL Model NO. : 3MAVR70XX

Attach sales receipt to this card and retain as your proof of purchase

DATE OF PURCHASE:_____ **RETAILER NAME:**_____

MODEL NUMBER:_____ **RETAILER ADDRESS:**_____

To register your fixture, please visit our website www.montecarlofans.com

c UL us LISTED

5 kg
11 lbs

Total fan weight

Cautions and Warnings

WARNING: TO REDUCE THE RISK OF FIRE, ELECTRIC SHOCK, OR INJURY TO PERSONS, OBSERVE THE FOLLOWING
READ AND SAVE THESE INSTRUCTIONS

Installation work and electrical wiring must be done by qualified person(s) in accordance with applicable codes and standards (ANSI/NFPA 70), including fire-rated construction.

Use this unit only in the manner intended by the manufacturer. If you have any questions contact the manufacturer.

After making the wire connections, the wires should be spread apart with the grounded conductor and the equipment-grounding conductor on one side of the outlet box and ungrounded conductor on the other side of the outlet box. The splices, after being made, should be turned upward and pushed carefully up into the outlet box.

WARNING: Before you begin installing the fan, servicing or cleaning unit, Switch power off at Service panel and lock service disconnecting means to prevent power from being switched on accidentally. When the service disconnecting means cannot be locked, securely fasten a prominent warning device, such as a tag, to the service panel.

Be cautious! Read all instructions and safety information before installing your new fan. Review the accompanying assembly diagrams.

When cutting or drilling into wall or ceiling, do not damage electrical wiring and other hidden utilities.

Make sure the installation site you choose allows the fan blades to rotate without any obstructions. Allow a minimum clearance of 7 feet from the floor to the trailing edge of the blade.

WARNING: To Reduce The Risk Of Fire, Electric Shock, or Personal Injury, Mount To Outlet Box Marked "Acceptable for Fan Support of 15.9 kg (35 lbs) or less" And Use Mounting Screws Provided With The Outlet Box.

WARNING: To reduce the risk of personal injury, do not bend blade holders during installation to motor, balancing or during cleaning. Do not insert foreign object between rotating blades.

CAUTION: For Compliance with Local Codes and Regulations, If Installing The Secondary Support Safety Cable in the U.S., Do Not Remove Knockouts In The Outlet Box. Mount the secondary support safety cable through the reserved nail/screw hole on the outlet box to the building structure (or the ceiling joist).

Attach the mounting bracket using only the hardware supplied with the outlet box.

WARNING: To Reduce The Risk Of Electric Shock, This Fan Must Be Installed With a general use, isolating Wall Control/Switch.

WARNING: To reduce the risk of fire or electric shock, this fan should only be used with fan speed control part no. BFR-G2LB9110G1 manufactured by Chungear Industrial Co. Ltd.

WARNING: To reduce the risk of fire or electric shock, do not use this fan with any other solid state fan speed control device, or variable speed control.

If this unit is to be installed over a tub or shower, it must be marked as appropriate for the application.

Never place a switch where it can be reached from a tub or shower.

The combustion airflow needed for safe operation of fuel-burning equipment may be affected by this unit's operation. Follow the heating equipment manufacturer's guideline safety standards such as those published by the National Fire Protection Association (NFPA), and the American Society for Heating, Refrigeration and Air Conditioning Engineers (ASHRAE) and the local code authorities.

CAUTION: To Reduce the Risk of Electric Shock, Disconnect the electrical supply circuit to the fan before installing the light kit.

CAUTION: The light source is designed for this specific application and can overheat if serviced by untrained personnel. If any servicing is required, the product should be returned to an authorized service facility for examination or repair.

All set screws must be checked, and re-tightened where necessary, before installation.

Note: Suitable for use in damp locations.

Tools Required for Assembly (not included): Electrical Tape, Phillips Screwdriver, Pliers, Safety Glasses, Stepladder and Wire Strippers

Customer Service
800-969-3347

Customer Service Center
7400 Linder Ave.
Skokie, IL 60077
www.montecarlofans.com

© 2020 Monte Carlo Fan Collections

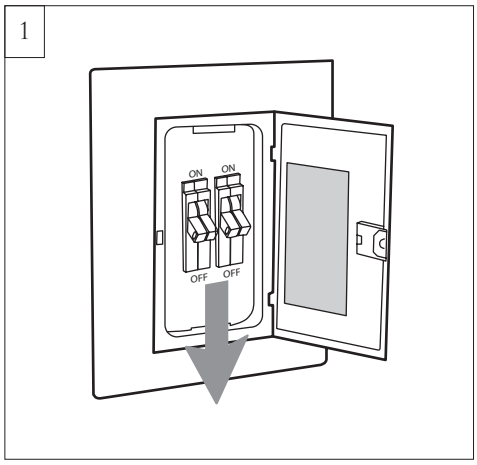

Before you begin installing the fan, Switch power off at Service panel and lock service disconnecting means to prevent power from being switched on accidentally. When the service disconnecting means cannot be locked, securely fasten a warning device, such as a tag, to the service panel.
Use AC 120V/60HZ power supply only.

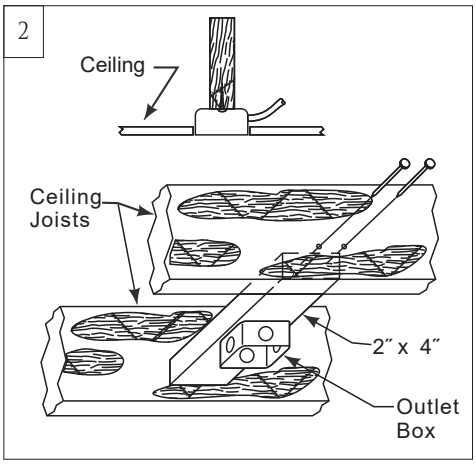

Before installing this fan makes sure the outlet box is properly installed to the house structure. Ensure the outlet box is securely fastened by at least two points to a structural ceiling member (a loose box will cause the fan to wobble).
To reduce the risk of fire, electric shock, or personal injury, mount to outlet box or supporting system acceptable for fan support.
(Mounting must support at least 35 lbs.)

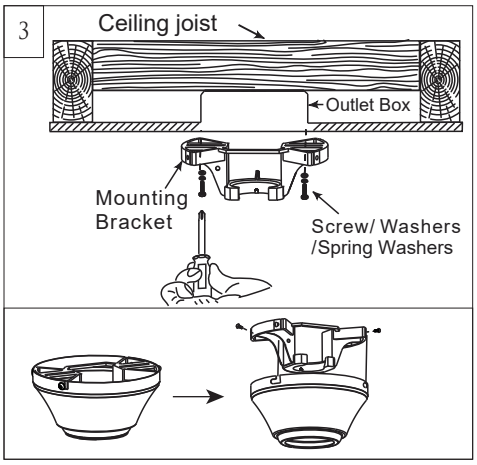

Partially loosen 2 of the set screws on mount ing bracket corresponding to the slotted holes on the canopy upper ring. Remove the other 2 set screws. Save screws.
Use metal outlet box suitable for fan support and use only the screws provided with the outlet box (must support 35 lbs). Remove the two outlet box screws provided with the box, aligning the holes of the mounting bracket with the holes of the outlet box. Reinstall the 2 outlet box screws securely.

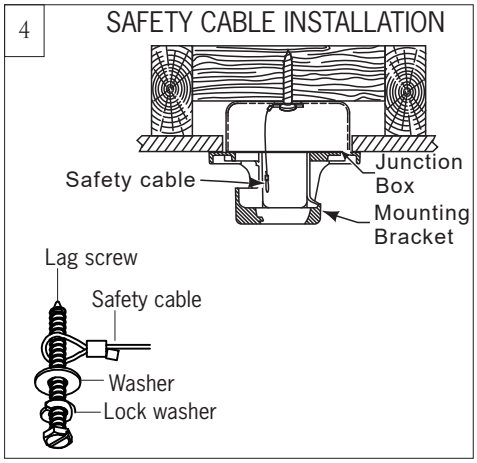

For Canadian installation and for USA fan and light kit combinations over 35 lbs, in both flush and downrod modes the safety cable must be installed into the house structure beams using 3” lag screws, washers and lock washers provided.
Note: If Installing The Secondary Support Safety Cable in the U.S., Do Not Remove Knockouts In The Outlet Box.

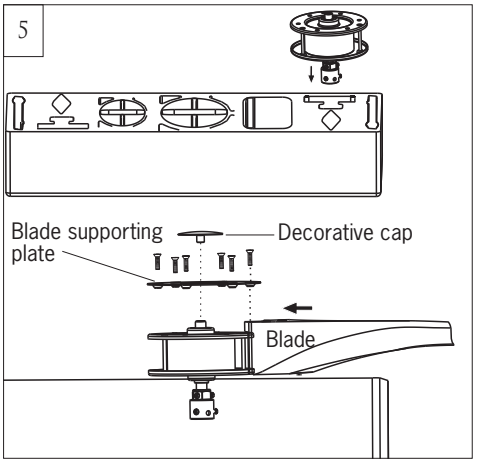

STOP: Do not install blade set screws unless blade and blade supporting plate are in place. Doing so will damage the motor and void the warranty.
Place motor assembly on bottom Styrofoam for blades installation.
Aligning the holes on blade, blade supporting plate (**Place it on the blade**) and the screw holes on motor as shown in illustration, and then partially install the set screws. Screws provided. Repeat this process for remaining blades.
Tighten all set screws securely after all the blades are installed to motor.
Install decorative cap onto motor shaft by turning clockwise until tight.

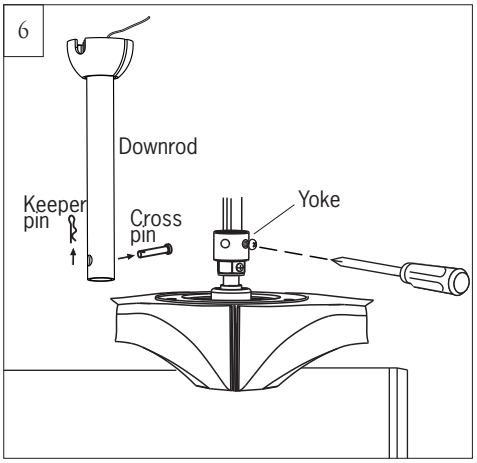

Flip the motor assembly with blades over. Partially loosen downrod set screws from yoke at top of motor assembly.
Remove preassembled cross pin and keeper pin from downrod.

© 2020 Monte Carlo Fan Collections

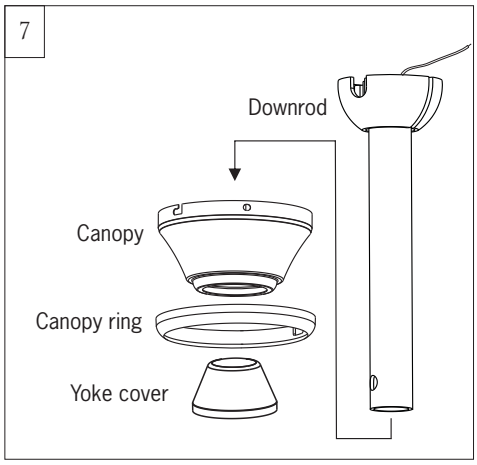

Place downrod over canopy, canopy ring and yoke cover.

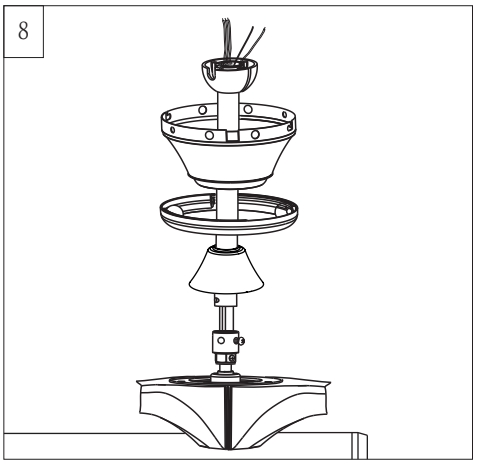

Thread lead wires and safety cable from motor assembly through downrod.

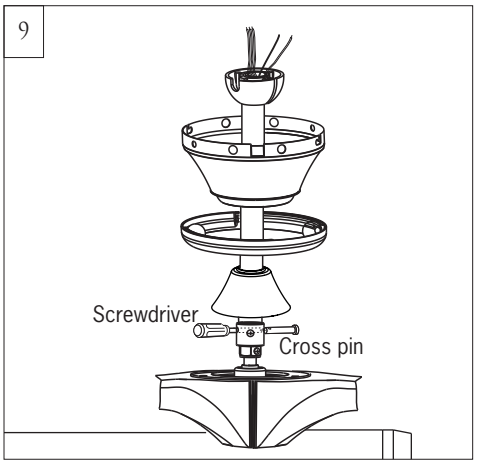

For easy installation of cross ping on next step.
Carefully insert a phillips screwdriver through yoke and downrod (don't damage the lead wires) as a guide and then push the cross pin and pull the screwdriver in the meantime as shown in illustration.

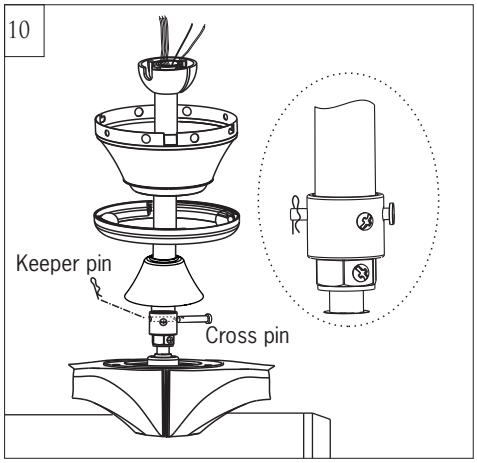

Slip downrod into motor yoke, aligning holes and install cross pin and keeper pin. Insert cross pin through yoke and downrod until point appears on the other side, and insert keeper pin on cross pin.
Pull the downrod up tight against the cross pin, and then evenly tighten the downrod set screws on motor housing yoke.
Place yoke cover on top housing of fan.
Warning: Cross pin and keeper pin must be installed securely, failure to install them will result in serious injury.

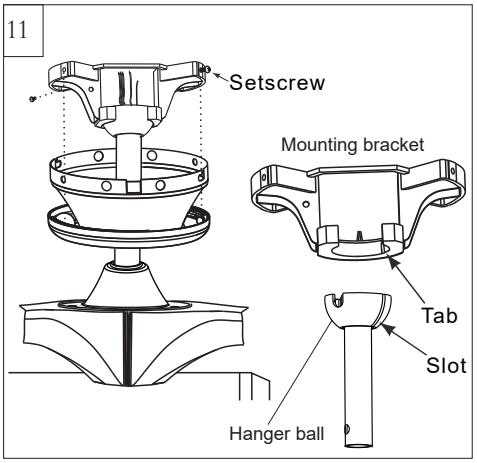

Install ball end of downrod into mounting bracket opening. Align (engage) slot on ball with tab on mounting bracket.
Warning: Failure to align slot on ball with tab may result in serious injury.
Important: If using the angle mount, make sure open end of mounting bracket is installed facing the higher point of the ceiling and make sure the ceiling angle is not steeper than 15º.

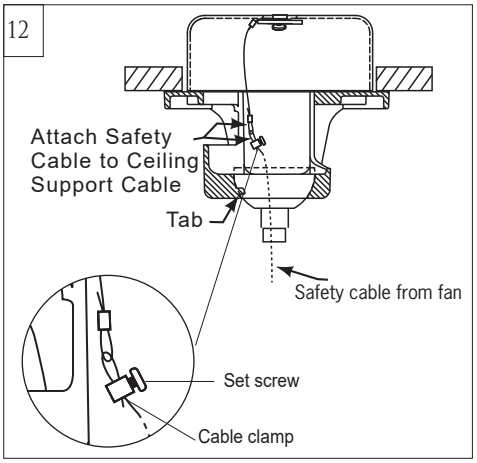

Connect the safety cable from fan to the Ceiling support cable.
Slide cable clamp onto the safety cable from fan. Place the end of cable through the loop of ceiling support cable and then feed end of cable into clamp hole and firmly tighten set screw. Cut off excess safety cable.
Make sure that when the safety cable is fully extended the lead wires are longer than the cable and no stress is placed on the lead wires.

© 2020 Monte Carlo Fan Collections

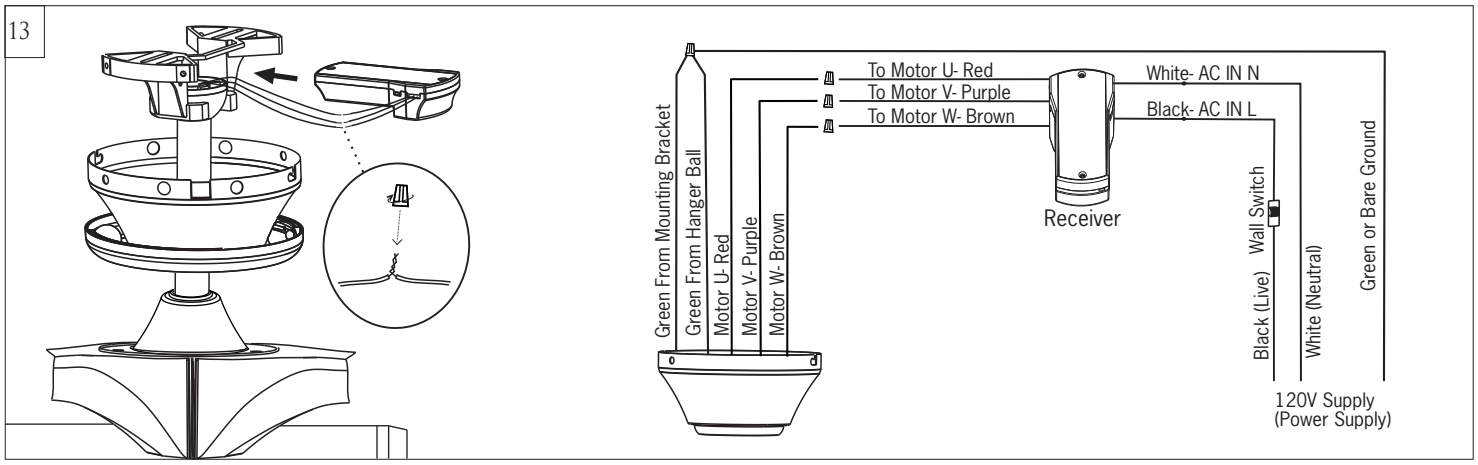

Make wiring connections using wire connectors provided as indicated above.
Red from fan to Red from remote marked Motor U.
Purple from fan to Purple from remote marked Motor V.
Brown from fan to Brown from remote marked Motor W.
White (Neutral) from house to White from remote marked AC IN N.
Black (Live) from house to Black from remote marked AC IN L.
Connect all green grounded wires to Grounded wire from House.
Make sure that no filaments are outside of the wire connectors.
Insert the remote receiver into mounting bracket.
After making the wire connections, the wires should be spread apart with the grounded conductor and the equipment-grounding conductor on one side of the outlet box and ungrounded conductor on the other side of the outlet box. The splices after being made should be turned upward and pushed carefully up into the outlet box.

Caution: The installation has to be complete before operate the fan.

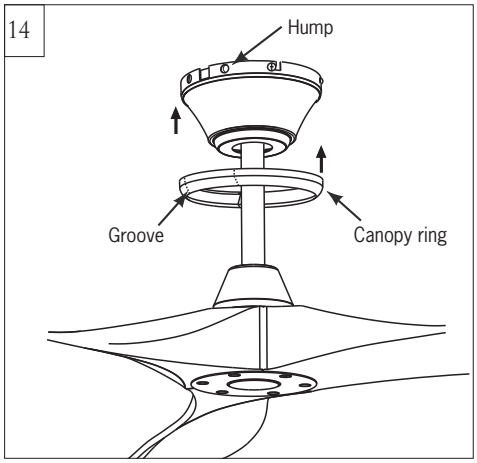

Raise canopy to mounting bracket, aligning loosened screws in mounting bracket with slotted holes in canopy. Twist canopy clockwise to lock. Reinstall screws (with washers) that were previously removed in step 3 and then tighten all screw securely
Install canopy ring onto canopy by aligning the grooves in canopy ring with the humps on canopy and snap it onto canopy.

© 2020 Monte Carlo Fan Collections

REMOTE CONTROL SETTING and OPERATION

Remove the battery cover from the remote control transmitter and install battery. Replace the cover.
Note: Use 2 1.5V/AAA battery to replace battery. (Fig. 1)
Note: If not using for long periods of time, remove battery to prevent damage to remote transmitter, and store the remote transmitter away from excess heat or humidity.

Install Transmitter wall mount cradle with 2 screws provided. Move the trim plate out from wall mount cradle and install the wall mount cradle with 2 screws provided. Replace the trim plate. (Fig. 2)

THIS DEVICE COMPLIES WITH PART 15 OF THE FCC RULES OPERATION IS SUBJECT TO THE FOLLOWING TWO CONDITIONS. (1)THIS DEVICE MAY NOT CAUSE HARMFUL INTERFERENCE AND (2) THIS DEVICE MUST ACCEPT ANY INTERFERENCE RECEIVED, INCLUDING INTERFERENCE THAT MAY CAUSE UNDESIRED OPERATION.

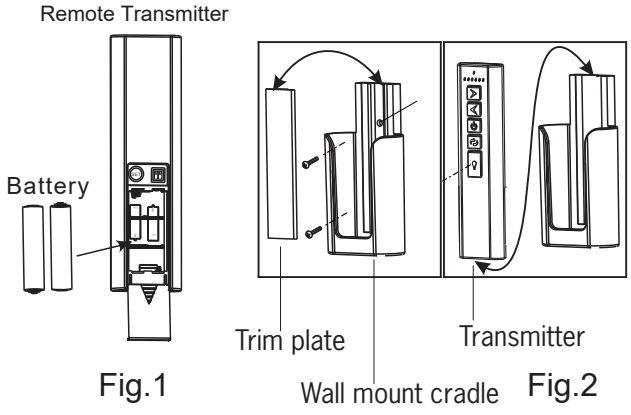

Fig.1 Fig.2

REMOTE CONTROL SETTING and OPERATION

Universal Mode and Learning Mode

There are “Universal Mode” and “Learning Mode” with the remote controller.

If choosing “**Universal Mode**”, simply place both dip (code) switch at UPPER position. Your fan with the remote controller is ready to use. (Fig. 3)

Note: If using universal mode, your fan can be controlled with other remote transmitters with the same setting.

To control the fan with specific remote transmitter, choose “**Learning Mode**” by placing the dip (code) switch at LOWER position and then make learn function setting as below.

Important: Only turn the power on for the fan which you would pair with the transmitter and make sure to turn the power off for all other fans which use the same remote controller.

Make **“Learn function setting”** at the position within 5 meter distance from the fan. Restore power source to your fan, press and hold the “SET” button for about 4 seconds until buzzer inside receiver sounds. Your remote controller is ready to operate the fan. You must press the “SET” button within 1 minute of restoring power to the fan. (Fig.3)

Note: If the power is on already, you must turn the power off for at least 5 seconds, then turn the power back, and wait for 5 seconds at least for remote control learn function setting. If the fan is running after turn power back, still wait for at least 5 seconds and then press and hold the “SET” button for about 4 seconds until buzzer inside receiver sounds. Your remote controller is ready to operate the fan.

Note: If you want to control a fan with 2 transmitters, turn the power off for at least 5 seconds and then turn the power back and wait for at least **6 seconds** for learn function setting. Setting for both transmitters must be done within 1 minute of restoring power to the fan. A fan can be controlled by 2 transmitters maximum when choose Learning Mode.

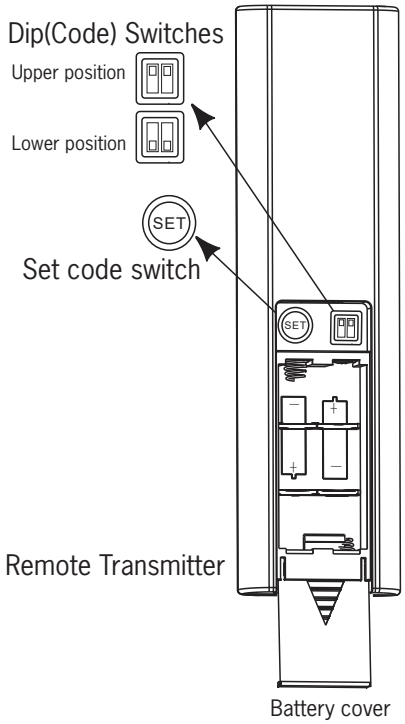

Fig.3

© 2020 Monte Carlo Fan Collections

The buttons on the remote control transmitter control the fan speed and light as follows. (Fig. 4)

Press the button to get desired fan speed, Low to High.

Press the button to get desired fan speed, High to Low.

Press the OFF button to turn fan off.

Press this forward/reverse button to get desired airflow direction. Fan must be running to reverse. It will take about 25 seconds for fan to slow down and change rotation direction.

Note: Fan will maintain last setting if turned off by a wall switch.

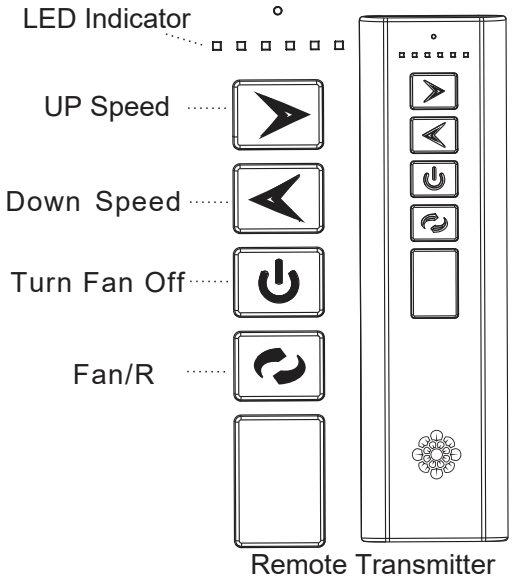

Fig.4

The receiver provides the following protective functions

Lock protection- The DC motor has a build-in safety feature against blade or motor obstruction during operation. If something obstructs the fan blades or motor, the motor will keep trying to run for 3 times and then stop operation after about 30 seconds of interruption. Please remove obstacles and reset. To reset it by turn the fan off by remote transmitter and then turn the fan on.

Over load protection (current limit)- The device will limits the maximum current output from the receiver/drive when the fan load was increased abnormally.

Tips for end users

1. If your fan is operated automatically after installation and power on, it is because your fan is still memorize the previous setting at factory. Use universal mode or make learn function setting and your fan will be ready for use.

2. If fan or light isn't working, reset power (turn the power off for at least 5 seconds, then turn the power back, and wait for 5 seconds at least) and redo the learn function setting. You must press the "SET" button within 1 minute of restoring power to the fan.

3. It is not available to separately operate the remote setting for more than one fan in the same room (in the area where remote signal can reach to) if they share the same power supply. Separate power supplies (like as using individual wall switches for each fan and only turn the power on for the fan which you would pair with the transmitter and make sure to turn the power off for all other fans which use the same remote controller) is required if you want to separately control more than one fan in same room.

4. You may erase the code setting of the transmitters by turning the power off for at least 5 seconds, then turn power back and wait for at least 5 seconds then push and hold the "OFF" button of the transmitter which you are using for at least 10 seconds. You must press the 'OFF" button within 60 seconds of restoring power to the fan.

5. When fan is turned on or operated forward/reverse function, it shutters & goes back & forth until it turns. It is a normal performance of this fan and it will take for few seconds to run this operation.

© 2020 Monte Carlo Fan Collections

Trouble Shooting

If you have difficulty operating your new ceiling fan, it may be the result of incorrect assembly, installation, or wiring. In some cases, these installation errors may be mistaken for defects. If you experience any faults, please check this Trouble Shooting Chart. If a problem cannot be remedied, or you are experiencing difficulty in installation, please call our Customer Service Center at the number printed on your parts list insert sheet.

Warning: Before servicing or cleaning unit, Switch power off at Service panel and lock service disconnecting means to prevent power from being switched on accidentally. When the service disconnecting means cannot be locked, securely fasten a prominent warning device, such as a tag, to the service panel.

Trouble	Suggested Remedy
1. If fan does not start:	1.Check main and branch circuit fuses or circuit breakers. 2.Check line wire connections to fan and switch wire connections in switch housing. **CAUTION**: Make sure main power is turned off. 3.If this fan uses manual forward/reverse switch, make sure the switch is pushed firmly either way. Fan will not operate when switch is in the middle. 4.If this fan uses remote controller, make sure dip switches are setting properly and make sure battery is effective.
2. If fan sounds noisy:	1.Check to make sure all screws in motor housing are snug (not over tightened). 2.Check to make sure the screws which attach the fan blade holder to the motor are tight. 3.Check to make sure wire nut connectors in switch housing are not rattling against each other or against the interior wall of the switch housing. **CAUTION**: Make sure main power is turned off before entering switch housing. 4.Check to be sure light bulb is tight in socket and not touching the glass shade. 5.Some fan motors are sensitive to signals from Solid State variable speed controls. 6.Allow "break-in" period of 24 hours. Most noises associated with a new fan will disappear after this period.
3. If fan wobbles:	1.If this is a downrod mount fan, make sure the ridge on mounting bracket engages the notch in the downrod ball. 2.Make sure that canopy, mounting bracket or mounting plate are tightened securely to ceiling junction box and junction box is mounted firmly to ceiling joist. 3.Check that all blades are screwed firmly into blade holders. 4.Check that all blade holders are tightened securely to motor. 5.Most fan wobble problems are caused when blade levels are unequal. Check this level by selecting a point on the ceiling above the tip of one of the blades. Measure this distance from blade tip to ceilng. Keeping measure within 1/8", rotate the fan until the next blade is positioned for measurement. Repeat for each blade. If all blade levels are not equal, you can adjust blade levels by the following procedure. To adjust a blade tip down, insert a washer (not supplied) between the blade and blade holder at the screw closest to the motor. To adjust a blade tip up, insert washer (not supplied) between the blade and blade holder at the two screws farthest from the motor. Reverse the position of the washer if blades mount from top of blade. 6.If blade wobble is still noticeable, interchanging two adjacent (side by side) blades can redistribute the weight and possibly result in smoother operation. If the above steps do not eliminate the wobble problem, you will need to dynamic balance your fan with balancing kit provided.
4. If light does not work:	1.Check blue wire from fan to make sure it is connected to hot wire from house. 2.Check for loose or disconnected wires in fan switch housing. 3.Check for loose or disconnected wires in light kit. 4.Check for faulty light bulb and make sure bulb is tight in socket. 5.Remove light kit and check the plug connections if they are present. 6.If this fan uses remote controller, make sure dip switches are setting properly and make sure battery is effective. **CAUTION**: Make sure main power is turned off before entering switch housing and/or canopy.

© 2020 Monte Carlo Fan Collections

Feb.2016
Jul.2016 update step 11
Mar.2019 update step 5
Feb.2020 branding
Apr.2021 add a wording about learn mold