Selection Chart
for Channels, Materials and Hole Patterns

Channel Type	Channel Dimensions: Height		Channel Dimensions: Width		Material & Thickness*: Steel 1	Alum. 2	Stainless Steel: Type 304 3	Stainless Steel: Type 316 4	Channel Hole Pattern**: SH 9/16" x 1 1/8" slots on 2" centers	S 13/32" x 3" slots	H1 7/8 9/16" diameter holes	TH 9/16" diameter on 1 7/8" centers	KO6 7/8" diameter knockouts
B11	3 1/4"	(82.5)	1 5/8"	(41.3)	12 Ga.	.105	–	–	1	1	1	–	1
B12	2 7/16"	(61.9)	1 5/8"	(41.3)	12 Ga.	.105	–	–	1 2	1	1 2	–	1 2
B22	1 5/8"	(41.3)	1 5/8"	(41.3)	12 Ga.	.105	12 Ga.	12 Ga.	1 2 3 4	1 3	1 2 3 4	1	1 2
B24	1 5/8"	(41.3)	1 5/8"	(41.3)	14 Ga.	—	14 Ga.	14 Ga.	1 2 3 4	1	1 2 3 4	–	1 2
B32	1 3/8"	(34.9)	1 5/8"	(41.3)	12 Ga.	–	12 Ga.	–	1 3	1	1 3	–	1
B42	1"	(25.4)	1 5/8"	(41.3)	12 Ga.	–	12 Ga.	–	1 3	1	1 3	–	1
B52	13/16"	(20.6)	1 5/8"	(41.3)	12 Ga.	–	12 Ga.	12 Ga.	1 3 4	1	1	–	1
B54	13/16"	(20.6)	1 5/8"	(41.3)	14 Ga.	.080	14 Ga.	14 Ga.	1 2 3 4	1	1 2 3 4	–	1 2
B62	13/16"	(20.6)	13/16"	(20.6)	18 Ga.	–	–	–	–	–	–	–	–
B72	13/32"	(10.3)	13/16"	(20.6)	18 Ga.	–	–	–	–	–	–	–	–

The selection has been prepared to provide a reference for available channel, materials and hole patterns. Material types available for various hole patterns are defined by numbers 1 thru 4.
Some stainless steel channels with hole patterns are available on special order only.

*Metric equivalent for thicknesses shown in chart.
12 Ga. = 2.6 mm 18 Ga. = 1.2 mm
14 Ga. = 1.9 mm .105 = 2.6 mm
16 Ga. = 1.5 mm .080 = 2.0 mm

**1 - Steel
2 - Aluminum
3 - Type 304 Stainless Steel
4 - Type 316 Stainless Steel

Properties may vary due to commercial tolerances of the material.

Channel Part Numbering Example:
B22 SH - 120 SS4

Channel Type	Hole Patterns	Length	Material/Finish
B11	SH (pg. 74)	120	GRN
B12	S (pg. 74)	240	GLV
B22	H178 (pg. 74)		HDG
B24	TH (pg. 75)		PLN
B32	K06 (pg. 75)		YZN
B42	SHA (pg. 75)		SS4 (See page 222)
B52	S58 (pg. 76)		SS6 (See page 222)
B54	M (pg. 76)		AL (See pages 219-220)
B62D	H25 (pg. 76)		
B72D	Leave blank for no hole pattern		

D Hole patterns are not available on these channel sizes

Reference page 48 for general fitting and standard finish specifications.

B22

- Thickness: 12 Gauge (2.6 mm)
- Standard lengths: 10' (3.05 m) & 20' (6.09 m)
- Standard finishes: Plain, DURA GREEN™, Pre-Galvanized, Hot-Dipped Galvanized, Stainless Steel Type 304 or 316, Aluminum
- Weight: 1.90 Lbs./Ft. (2.83 kg/m)

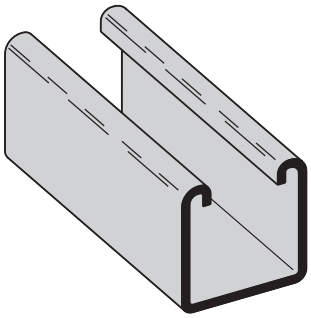

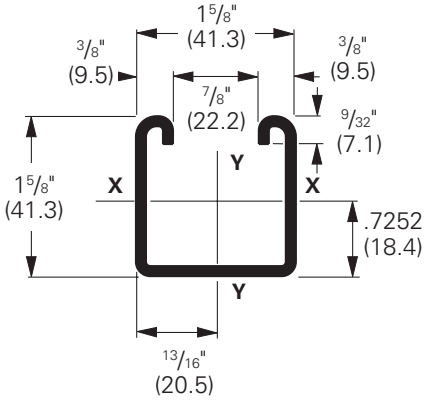

Note:
Aluminum loading, for B22 & B22A, can be determined by multiplying load data times a factor of 0.38

Section Properties					X - X Axis						Y - Y Axis					
Channel	Weight lbs./ft.	kg/m	Areas of Section sq. in.	cm²	Momentof Inertia (I) in.⁴	cm⁴	Section Modulus (S) in.³	cm³	Radius of Gyration (r) in.	cm	Moment of Inertia (I) in.⁴	cm⁴	Section Modulus (S) in.³	cm³	Radius of Gyration (r) in.	cm
B22	1.910	(2.84)	.562	(3.62)	.1912	(7.96)	.2125	(3.48)	.583	(1.48)	.2399	(9.99)	.2953	(4.84)	.653	(1.66)
B22A	3.820	(5.69)	1.124	(7.25)	.9732	(40.51)	.5989	(9.81)	.931	(2.36)	.4798	(19.97)	.5905	(9.68)	.653	(1.66)
B22X	6.649	(9.89)	1.956	(12.62)	4.1484	(172.67)	1.7019	(27.89)	1.456	(3.70)	1.1023	(45.88)	1.2027	(19.71)	.751	(1.91)

Calculations of section properties are based on metal thicknesses as determined by the AISI Cold-Formed Steel Design Manual.

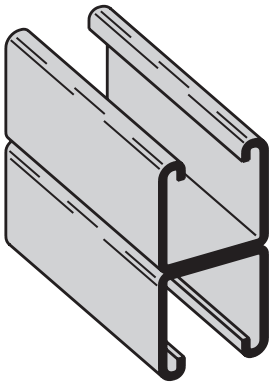

B22A
Wt. 3.80 Lbs./Ft. (5.65 kg/m)

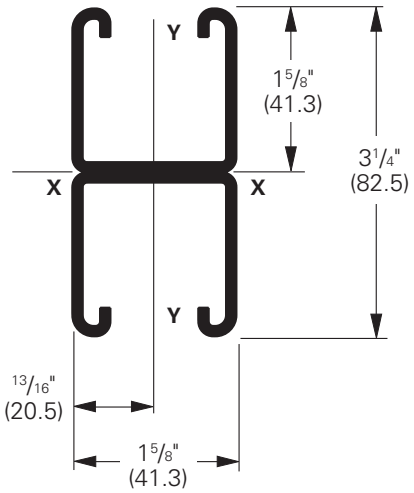

Reference page 48 for general fitting and standard finish specifications.

Beam Loading

Beam Span In.	Beam Span mm	Channel Style	Uniform Load and Deflection Lbs.	Uniform Load and Deflection kN	Uniform Load and Deflection In.	Uniform Load and Deflection mm	Uniform Load @ Deflection = 1/240 Span Lbs.	Uniform Load @ Deflection = 1/240 Span kN	Uniform Load @ Deflection = 1/360 Span Lbs.	Uniform Load @ Deflection = 1/360 Span kN
12	(305)	**B22**	2610	(11.61)	.014	(.35)	2610	(11.61)	2610	(11.61)
		B22A	2610*	(11.61)	.002	(.05)	2610*	(11.61)	2610*	(11.61)
		B22X	5790*	(25.75)	.001	(.02)	5790*	(25.75)	5790*	(25.75)
18	(457)	**B22**	2269	(10.09)	.031	(.79)	2269	(10.09)	2269	(10.09)
		B22A	2610*	(11.61)	.007	(.18)	2610*	(11.61)	2610*	(11.61)
		B22X	5790*	(25.75)	.003	(.07)	5790*	(25.75)	5790*	(25.75)
24	(609)	**B22**	1702	(7.57)	.056	(1.42)	1702	(7.57)	1702	(7.57)
		B22A	2610*	(11.61)	.017	(.43)	2610*	(11.61)	2610*	(11.61)
		B22X	5790*	(25.75)	.008	(.20)	5790*	(25.75)	5790*	(25.75)
30	(762)	**B22**	1361	(6.05)	.087	(2.21)	1361	(6.05)	1294	(5.75)
		B22A	2610*	(11.61)	.033	(.84)	2610*	(11.61)	2610*	(11.61)
		B22X	5790*	(25.75)	.017	(.73)	5790*	(25.75)	5790*	(25.75)
36	(914)	**B22**	1135	(5.05)	.126	(3.20)	1135	(5.05)	899	(4.00)
		B22A	2610*	(11.61)	.057	(1.45)	2610*	(11.61)	2610*	(11.61)
		B22X	5790*	(25.75)	.029	(.73)	5790*	(25.75)	5790*	(25.75)
42	(1067)	**B22**	972	(4.32)	.172	(4.37)	972	(4.32)	660	(2.93)
		B22A	2610*	(11.61)	.091	(2.31)	2610*	(11.61)	2610*	(11.61)
		B22X	5790*	(25.75)	.046	(1.17)	5790*	(25.75)	5790*	(25.75)
48	(1219)	**B22**	851	(3.78)	.224	(5.69)	758	(3.37)	505	(2.24)
		B22A	2405	(10.70)	.125	(3.17)	2405	(10.70)	2405	(10.70)
		B22X	5790*	(25.75)	.068	(1.73)	5790*	(25.75)	5790*	(25.75)
54	(1371)	**B22**	756	(3.36)	.284	(7.21)	599	(2.66)	399	(1.77)
		B22A	2138	(9.51)	.158	(4.01)	2138	(9.51)	2024	(9.00)
		B22X	5790*	(25.75)	.097	(2.46)	5790*	(25.75)	5790*	(25.75)
60	(1524)	**B22**	681	(3.03)	.351	(8.91)	485	(2.16)	323	(1.44)
		B22A	1924	(8.56)	.195	(4.95)	1924	(8.56)	1640	(7.29)
		B22X	5645	(25.11)	.130	(3.30)	5645	(25.11)	5645	(25.11)
66	(1676)	**B22**	619	(2.75)	.424	(10.77)	401	(1.78)	267	(1.19)
		B22A	1749	(7.78)	.236	(5.99)	1749	(7.78)	1355	(6.03)
		B22X	5132	(22.83)	.158	(4.01)	5132	(22.83)	5132	(22.83)
72	(1829)	**B22**	567	(2.52)	.505	(12.83)	337	(1.50)	225	(1.00)
		B22A	1603	(7.13)	.281	(7.14)	1603	(7.13)	1139	(5.06)
		B22X	4704	(20.92)	.188	(4.77)	4704	(20.92)	4704	(20.92)
78	(1981)	**B22**	524	(2.33)	.593	(15.06)	287	(1.27)	191	(0.85)
		B22A	1480	(6.58)	.330	(8.38)	1455	(6.47)	970	(4.31)
		B22X	4342	(19.31)	.220	(5.59)	4342	(19.31)	4270	(18.99)
84	(2133)	**B22**	486	(2.16)	.687	(17.45)	248	(1.10)	165	(0.73)
		B22A	1374	(6.11)	.383	(9.73)	1255	(5.58)	837	(3.72)
		B22X	4032	(17.93)	.255	(6.48)	4032	(17.93)	3682	(16.38)
90	(2286)	**B22**	454	(2.02)	.789	(20.04)	216	(0.96)	144	(0.64)
		B22A	1283	(5.71)	.440	(11.17)	1093	(4.86)	729	(3.24)
		B22X	3763	(16.74)	.293	(7.44)	3763	(16.74)	3207	(14.26)
96	(2438)	**B22**	425	(1.89)	.898	(22.81)	190	(0.84)	126	(0.56)
		B22A	1202	(5.35)	.500	(12.70)	961	(4.27)	640	(2.85)
		B22X	3528	(15.69)	.334	(8.48)	3528	(15.69)	2819	(12.54)
102	(2591)	**B22**	400	(1.78)	1.013	(25.73)	168	(0.75)	112	(0.50)
		B22A	1132	(5.03)	.565	(14.35)	851	(3.78)	567	(2.52)
		B22X	3320	(14.77)	.377	(9.57)	3320	(14.77)	2497	(11.11)
108	(2743)	**B22**	378	(1.68)	1.136	(28.85)	150	(0.67)	100	(0.44)
		B22A	1069	(4.75)	.633	(16.08)	759	(3.37)	506	(2.25)
		B22X	3136	(13.95)	.422	(10.72)	3136	(13.95)	2227	(9.90)
114	(2895)	**B22**	358	(1.59)	1.266	(32.15)	134	(0.59)	90	(0.40)
		B22A	1013	(4.50)	.706	(17.93)	681	(3.03)	454	(2.02)
		B22X	2971	(13.21)	.471	(11.96)	2971	(13.21)	1999	(8.89)
120	(3048)	**B22**	340	(1.51)	1.403	(35.63)	121	(0.54)	81	(0.36)
		B22A	962	(4.28)	.782	(19.86)	615	(2.73)	410	(1.82)
		B22X	2822	(12.55)	.521	(13.23)	2706	(12.04)	1804	(8.02)

Based on simple beam condition using an allowable design stress of 25,000 psi (172 MPa) in accordance with MFMA, with adequate lateral bracing (see page 12 for further explanation). Actual yield point of cold rolled steel is 42,000 psi. To determine concentrated load capacity at mid span, multiply uniform load by 0.5 and corresponding deflection by 0.8. *Failure determined by weld shear.

Reference page 48 for general fitting and standard finish specifications.

B11SH thru B56SH
SH Type Channel
• For beam loads use 90% of Channel Loading Chart

Part No.	Thickness	Height H In.	Height H mm	Weight Lbs./Ft.	Weight kg/m
B11SH	12 Ga. (2.6)	3 1/4"	(82.5)	2.97	(4.42)
B12SH	12 Ga.(2.6)	2 7/16"	(61.9)	2.39	(3.55)
B22SH	12 Ga.(2.6)	1 5/8"	(41.3)	1.82	(2.71)
B24SH	14 Ga.(1.9)	1 5/8"	(41.3)	1.34	(1.99)
B32SH	12 Ga.(2.6)	1 3/8"	(34.9)	1.62	(2.41)
B42SH	12 Ga.(2.6)	1"	(25.4)	1.36	(2.02)
B52SH	12 Ga.(2.6)	13/16"	(20.6)	1.19	(1.77)
B54SH	14 Ga.(1.9)	13/16"	(20.6)	.91	(1.35)

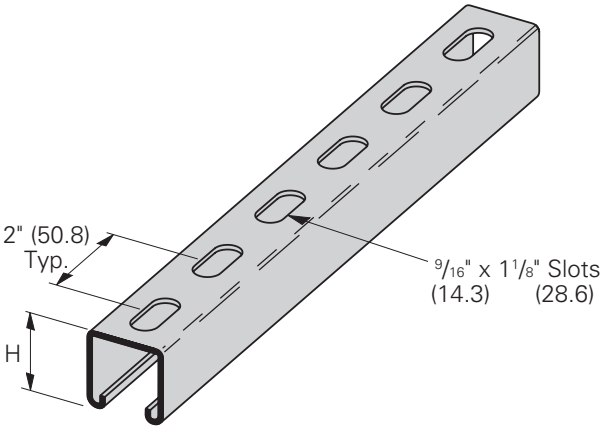

B11S thru B56S
S Type Channel
• For beam loads use 90% of Channel Loading Chart

Part No.	Thickness	Height H In.	Height H mm	Weight Lbs./Ft.	Weight kg/m
B11S	12 Ga. (2.6)	3 1/4"	(82.5)	2.94	(4.37)
B12S	12 Ga.(2.6)	2 7/16"	(61.9)	2.36	(3.51)
B22S	12 Ga.(2.6)	1 5/8"	(41.3)	1.79	(2.66)
B24S	14 Ga.(1.9)	1 5/8"	(41.3)	1.32	(1.96)
B32S	12 Ga.(2.6)	1 3/8"	(34.9)	1.59	(2.36)
B42S	12 Ga.(2.6)	1"	(25.4)	1.33	(1.98)
B52S	12 Ga.(2.6)	13/16"	(20.6)	1.16	(1.72)
B54S	14 Ga.(1.9)	13/16"	(20.6)	.89	(1.32)

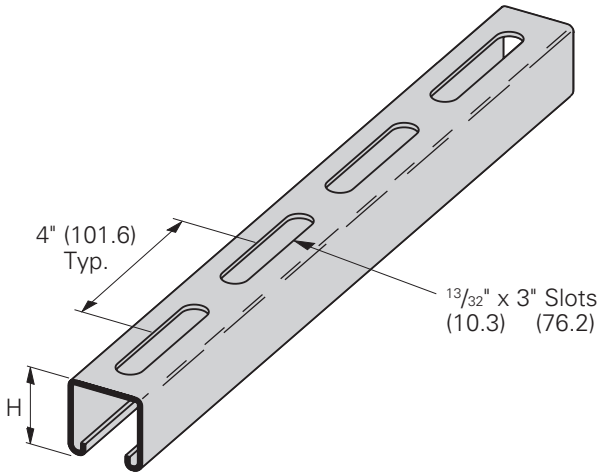

B11H17/8 thru B56H17/8
H17/8 Type Channel
• For beam loads use 90% of Channel Loading Chart

Part No.	Thickness	Height H In.	Height H mm	Weight Lbs./Ft.	Weight kg/m
B11H17/8	12 Ga. (2.6)	3 1/4"	(82.5)	3.00	(4.46)
B12H17/8	12 Ga.(2.6)	2 7/16"	(61.9)	2.42	(3.60)
B22H17/8	12 Ga.(2.6)	1 5/8"	(41.3)	1.85	(2.75)
B24H17/8	14 Ga.(1.9)	1 5/8"	(41.3)	1.36	(2.02)
B32H17/8	12 Ga.(2.6)	1 3/8"	(34.9)	1.65	(2.45)
B42H17/8	12 Ga.(2.6)	1"	(25.4)	1.39	(2.07)
B52H17/8	12 Ga.(2.6)	13/16"	(20.6)	1.22	(1.81)
B54H17/8	14 Ga.(1.9)	13/16"	(20.6)	.93	(1.38)

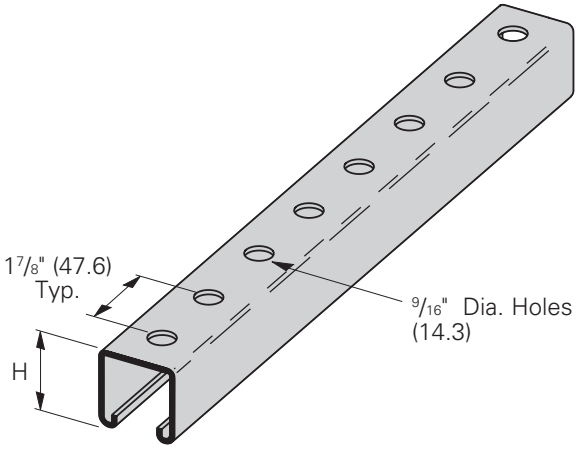

Reference page 48 for general fitting and standard finish specifications.