SMITH CUSTOMER DRIVEN SINCE 1926	**Jay R. Smith Mfg. Co.** **Wholesaler's Parts Order Number Guide**	**5560QT, 5561QT**

PART	DESCRIPTION	ITEM NUMBER
	Bronze Box w/Chrome Plated Face	5560BACP
	Rough Bronze Box w/Cover	5560BARB
	Polished Bronze Box w/Cover	5560BAPB
	Nickel Bronze Box w/Cover	5560BANB
	Cast Iron Box w/Cover	5560BACI
	Cover Assembly, Chrome Plated	5560CACP
	Cover Assembly, Rough Nickel	5560CARN
	Cover Assembly, Rough Bronze	5560CARB
3	Part 3 Key	5560-PART03
7	Part 7 Face Nut (2 reqd) ea	5560-PART07
10	Operator Rod, Short as Poss, ea (2 reqd)	73790-80-40-014
10	Operator Rod, for 8" Wall, ea (2 reqd)	73790-80-40-084
10	Operator Rod, for 10" Wall, ea (2 reqd)	73790-80-40-104
10	Operator Rod, for 12" Wall, ea (2 reqd)	73790-80-40-124
10	Operator Rod, for 14" Wall, ea (2 reqd)	73790-80-40-144
11	Part 11 Face Nut Washer, ea (2 reqd)	5509QT-PART11
	Repair Kit HPRK-7, ea (2 reqd)	HPRK-7

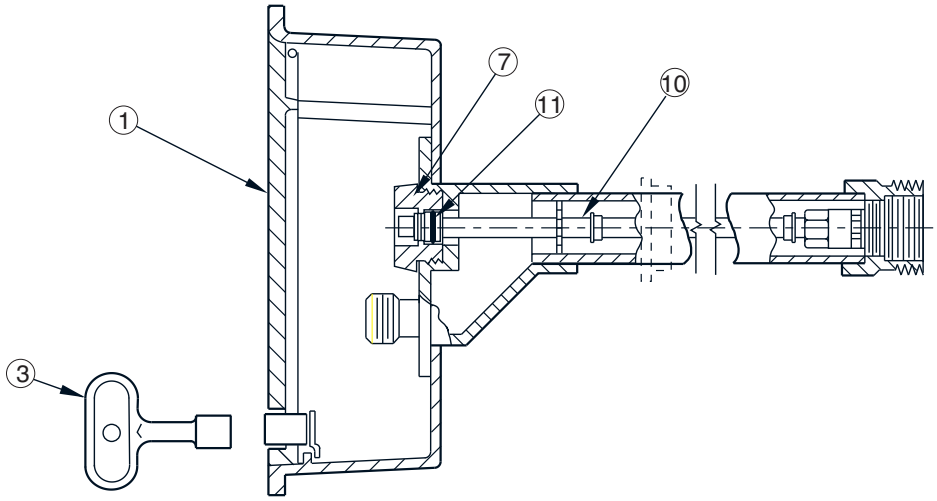

5609QT	Jay R. Smith Mfg. Co. Wholesaler's Parts Order Number Guide	SMITH® CUSTOMER DRIVEN SINCE 1926

PART	DESCRIPTION	ITEM NUMBER
3	Hydrant Key	5609QT-PART03
7	Face Nut	5609QT-PART07
10	Operator Rod for Short as Possible	73790-80-40-014
10	Operator Rod for 4" Wall	73790-80-40-044
10	Operator Rod for 6" Wall	73790-80-40-064
10	Operator Rod for 8" Wall	73790-80-40-084
10	Operator Rod for 10" Wall	73790-80-40-104
10	Operator Rod for 12" Wall	73790-80-40-124
10	Operator Rod for 14" Wall	73790-80-40-144
10	Operator Rod for 16" Wall	73790-80-40-164
10	Operator Rod for 18" Wall	73790-80-40-184
11	Face Nut Washer	5609QT-PART11
*	Face Nut Wrench	5500FNW
12	Wall Clamp	5609QT-WC
14	Backer Plate Kit, NB	5609QT-BPKNP
14	Backer Plate Kit, PB	5609QT-BPKPB
14	Backer Plate Kit, CP	5609QT-BPKCP
	Repair Kit for Vacuum Breaker	HPRK-7VB
	Repair Kit f/5609QT	HPRK-7

*Available, but not shown

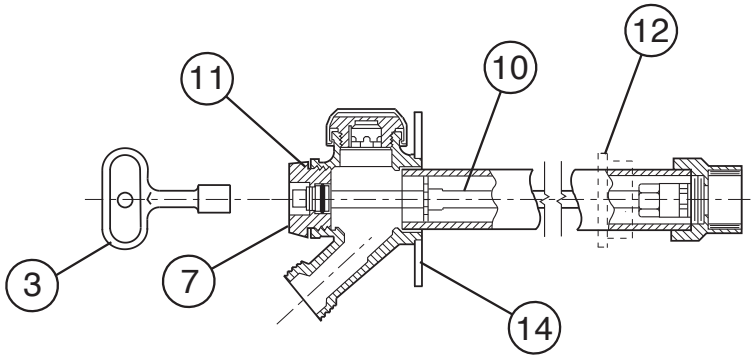

HPRK (Hydrant Repair Kit)	Jay R. Smith Mfg. Co. Wholesaler's Parts Order Number Guide	

PART	DESCRIPTION	ITEM NUMBER	
	Repair Kit f/Hydrant	HPRK-2	
	Repair Kit f/Hydrant	HPRK-7	
	Repair Kit f/Hydrant	HPRK-11	
	Repair Kit f/Hydrant	HPRK-12	
	Repair Kit f/Hydrant	HPRK-19	
	Repair Kit f/Hydrant	HPRK-21	
	Repair Kit f/Hydrant	HPRK-31	
	Repair Kit HPRK-42	5810HPRK-1/79	
	Repair Kit HPRK-41	5810HPRK-1/84	
	Repair Kit f/Hydrant	HPRK-3	
	Repair Kit f/Hydrant	HPRK-5	
	Repair Kit f/Hydrant	HPRK-9	
	Repair Kit f/Hydrant	HPRK-51	
	Repair Kit f/Hydrant	HPRK-6	