102-533

006e3™ Instruction Sheet

ECM High-Efficiency Circulator

SUPERSEDES: May 5, 2021 EFFECTIVE: August 16, 2021

Plant ID No. 001-5005

DESCRIPTION:

The 00e® series 006e3 is a 3-setting wet rotor circulator with an ECM, permanent magnet motor. A simple dial adjusts operating speed to Low, Medium or High settings. Its high-efficiency motor reduces power consumption by up to 85% compared to equivalent AC permanent split capacitor circulators.

Figure 1:

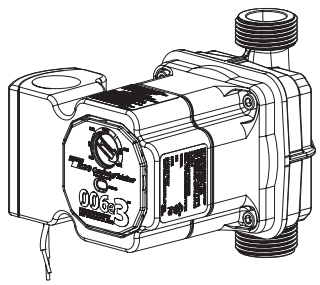

APPLICATION:

- Maximum operating pressure: 150 psi (10 bar)
- Maximum water temperature: 203°F (95ºC)
- Electrical specifications:
  - Voltage: 110-120V, 50/60 Hz, single phase
  - Maximum operating power: 44W
  - Maximum amp rating: 0.54
- Equipped with an engineered composite casing with 1" union connections
- Use on open loop potable hot water circulation systems or closed loop hydronic heating systems
- Not suitable for chilled water systems
- Taco circulator pumps are for indoor use only – employer uniquement a l'interieur
- Acceptable for use with water or maximum of 50% water/glycol solution

FEATURES:

- Operating modes
  - Low, Medium or High
  - Pre-marked 003/006 performance point references
  - Min/Max infinitely variable fixed speeds
- Multi-color LED display showing operating mode and error code diagnostics
- Union connection, composite casing
- Optional 1/2" & 3/4" union fitting sets available - sweat, npt or press connections (sold separately)
- Dual electrical knockouts and 6" stranded wire leads for easy wiring (006e3LC model includes 6' power cord)
- Double insulated - no ground-wire required
- Whisper quiet operation
- ***SureStart®*** - automatic unblocking and air purging mode

INSTALLATION:

WARNING: Follow all local plumbing and electrical codes when installing this product.
AVERTISSEMENT: Respectez tous les codes de plomberie et d'électricité locaux lors de l'installation de ce produit.

CAUTION: To ensure all plumbing system components are protected from the damaging effects of water hammer, be sure an approved water hammer arrestor is installed in the system per locally recognized National plumbing codes.
ATTENTION: Pour vous assurer que tous les composants du système de plomberie sont protégés contre les effets dommageables du coup de bélier, assurez-vous qu'un parafoudre approuvé est installé dans le système conformément aux codes de plomberie nationaux reconnus localement.

WARNING: Do not use in swimming pool or spa areas. Pump has not been investigated for these applications.
AVERTISSEMENT: Ne pas utiliser dans une piscine ou un spa. La pompe n'a pas été étudiée pour ces applications.

CAUTION: The addition of petroleum based fluids or certain chemical additives to systems using TACO equipment voids the warranty. Consult factory for fluid compatibility.
ATTENTION: L'ajout de liquides à base de pétrole ou de certains additifs chimiques à des systèmes utilisant un équipement TACO annule la garantie. Consultez le fabricant pour connaître la compatibilité de liquides.

CAUTION: Installations at elevations over 5000 feet must have higher fill pressure of 20 psi minimum to prevent pump cavitation and flashing. Premature failure may result. Adjust expansion tank pressure to equal fill pressure. A larger size expansion tank may be required.
ATTENTION: Des installations à des altitudes de plus de 1600 mètres doivent présenter une pression de remplissage plus élevée de 20 psi au minimum afin d'éviter toute cavitation ou flashing de la pompe. Une défaillance prématurée peut en résulter. Réglez la pression du réservoir d'expansion de façon qu'elle soit égale à la pression de remplissage. Un réservoir d'expansion d'une taille supérieure peut être nécessaire.

Figure 2:

Typical Installation for Hot Water Recirculation Systems

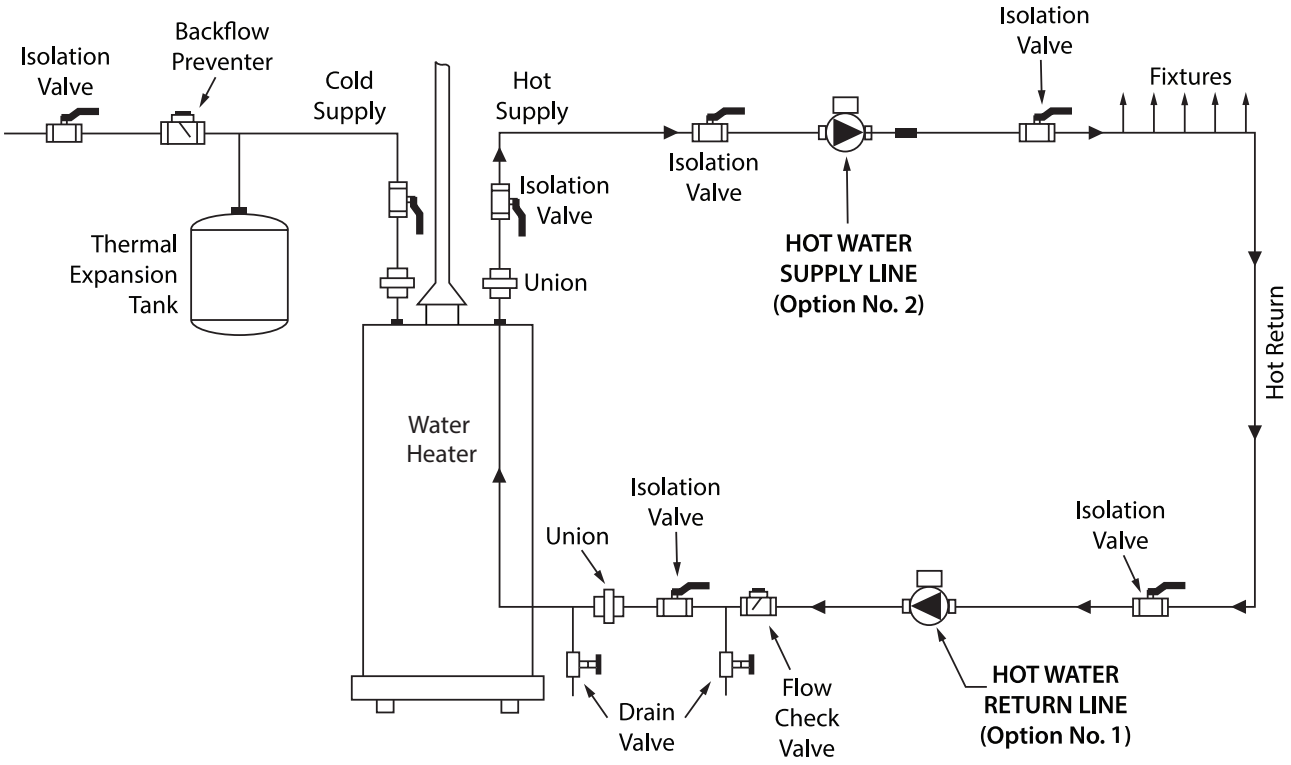

Recommended Purging Steps:

1. Open fixture at highest point in system
2. Open all isolation valves
3. Once system is filled, close the fixture at the highest point in the system
4. Close isolation valve on pump discharge
5. Open drain valve on pump discharge until all remaining air has been purged
6. Close drain valve
7. Operate pump until all remaining air is purged from bearing chamber

Figure 3:

Typical Installation for Zoned Hydronic Heating Systems

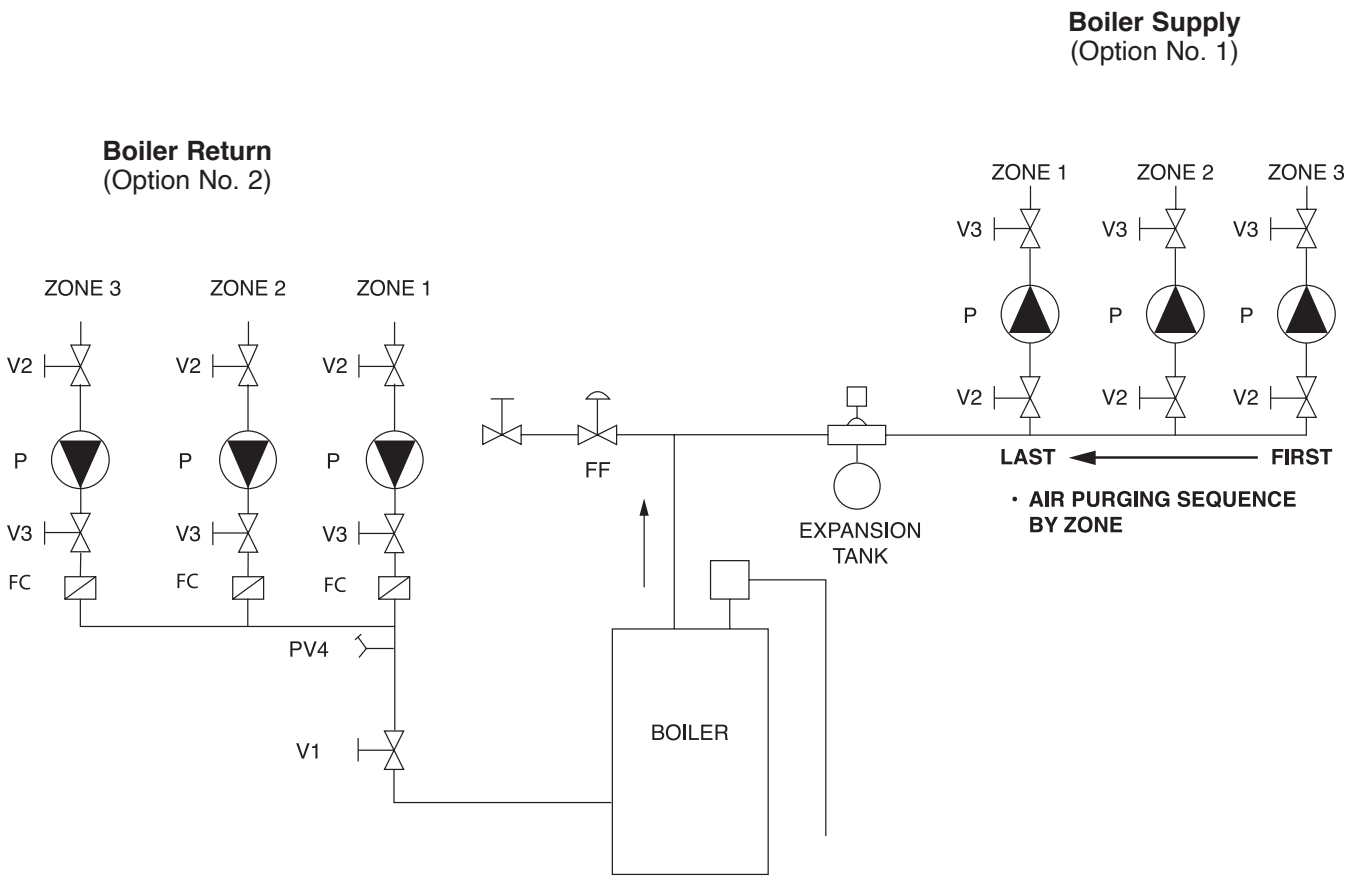

KEY:

VI, V2, V3 = SHUT-OFF ISOLATION VALVE
P = TACO CIRCULATOR
FF = FAST FILL BOILER FEED VALVE
PV4 = PURGE VALVE
FC = FLOW CHECK VALVE

RECOMMENDED PURGING STEPS:

1. CLOSE V1, PV4, V2
2. OPEN V3
3. OPEN FF VALVE
4. OPEN V2, PV4, TO PURGE LAST ZONE FIRST (ZONE 3)
5. CLOSE FF VALVE
6. CLOSE V2, PV4
7. REPEAT STEPS 1 TO 6 FOR EACH ADDITIONAL ZONE, PURGE ZONE 1 LAST
8. OPEN V1 WHEN ALL ZONES ARE PURGED
9. ADJUST SYSTEM TO DESIRED OPERATING FILL PRESSURE IF REQUIRED

1. **Location:** The circulator can be installed on the supply or return side of the water heater or heat source. See Figures 2 & 3, on page 2 for preferred locations.
2. **Mounting position:** Circulator must be mounted with the motor in the horizontal position. See diagrams below for acceptable motor mounting orientations.
3. Install the union tailpiece fitting set (sold seperately) best suited for your system piping. (See Union Fitting Options chart on page 7).

CAUTION: Install fittings to system piping before connecting the circulator to avoid damaging the pump's composite casing.

4. Install circulator by attaching pump casing to each union tailpiece fitting. Tighten union nut onto circulator threading (being careful not to overtighten) to complete the installation.

CAUTION: Only use union gaskets provided with union fitting sets or leaks may result. Warranty will be void.

ACCEPTABLE MOTOR MOUNTING POSITIONS

Figure 4: Always install with motor in horizontal orientation.

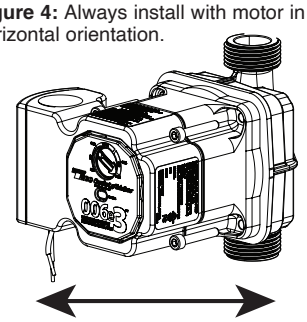

Always install with motor in horizontal orientation. Position electrical junction box at 9 o'clock for best viewing orientation. Pump casing may be rotated to change flow direction. Locate the arrow on the casing body to determine flow direction.

Figure 5: Spin casing to change flow direction.

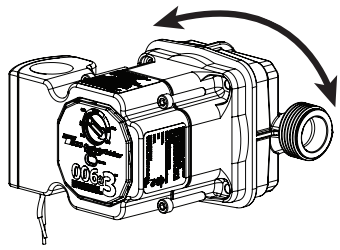

CASING ROTATION

Figure 6: Do not detach motor frame from pump casing. Simply spin casing to the proper flow direction.

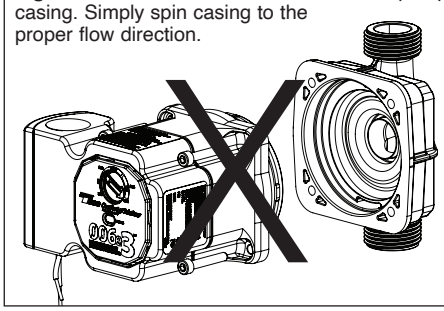

To rotate the pump casing, remove the 4 motor screws using a 5/32" (4 mm) allens wrench. **When rotating pump casing position, DO NOT detach motor housing from the casing.** Damage to the casing O-ring and leakage may result. Simply spin casing to the proper flow direction desired as shown in Figure 4 and Figure 5. Reattach the 4 screws. Be sure motor is positioned correctly and is seated evenly to prevent leakage or damage to O-ring. Tighten motor screws evenly to **25-33** in-lbs torque.

CAUTION: To reduce the possibility of noise transmission, be sure to add vibration dampeners to piping when mounting circulator to wall or floor joists.
ATTENTION: Pour réduire la possibilité de transmission de bruit, veillez à ajouter des amortisseurs de vibration à la tuyauterie lors du montage du circulateur sur des chevêtres de mur ou de plancher.

5. **Filling the system:** Fill the system with tap water or a maximum of 50% propylene-glycol and water solution**.** The system must be filled before operating the circulator. The bearings are water lubricated and should not be allowed to operate dry. Filling the system will result in immediate lubrication of the bearings. It is always good practice to flush a new system of foreign matter before starting the circulator. See page 2 for recommended air purging steps.

WARNING: Risk of electric shock. To reduce the risk of electric shock, be certain that it is connected only to a properly grounded, grounding-type receptacle. Follow all local electrical and plumbing codes.
AVERTISSEMENT: Risque de choc électrique. Pour réduire le risque de choc électrique, veillez à ce qu'elle soit raccordée uniquement à un réceptacle de type mise à la terre proprement mis à la terre. Respectez tous les codes de plomberie et électriques locaux.

WARNING: Use supply wires suitable for 90°C. AVERTISSEMENT: Employer des fils d'alimentation adeqauts pour 90°C.

WARNING: Disconnect power when servicing.

CAUTION: Use flexible conduit only. Not for use with rigid conduit.

WARNING: SERVICING OF DOUBLE-INSULATED APPLIANCES. A double-insulated appliance is marked with one or more of the following: The words "DOUBLE INSULATION" or "DOUBLE INSULATED" or the double insulation symbol (square within a square). In a double-insulated appliance, two systems of insulation are provided instead of grounding. No grounding means is provided on a double-insulated appliance, nor should a means for grounding be added. Servicing a double-insulated appliance requires extreme care and knowledge of the system, and should be done by qualified service personnel. Replacement parts for a double-insulated appliance must be identical to the parts they replace.

6. **Wiring the circulator:** Disconnect AC power supply. Remove terminal box cover. Attach a wiring connector into knockout hole. Use flexible conduit only. Connect Line/Hot power to the black lead, Neutral to the white lead. See wiring diagram.

Note: If pigtail leads provided are not used, be sure to trim field wire to a strip length of .25" (+/- .025") to prevent exposed wire causing a short at the terminal plug. Connect line and neutral to green terminal plug as shown in diagram. Depress the spring tab with a small screwdriver to insert wire into plug. Release tabs to complete connection. The 006e3 is a double insulated circulator, no grounding wire is necessary. Replace terminal box cover.

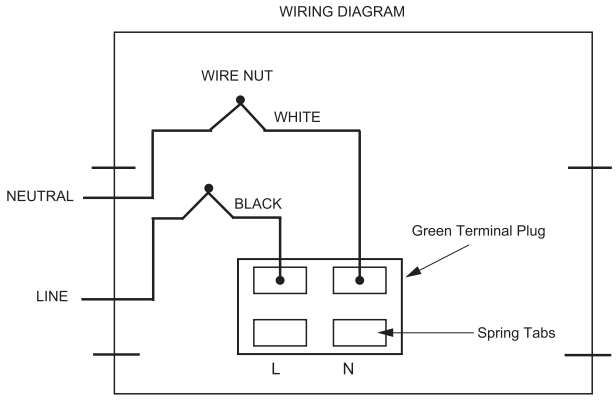

No ground wire is required.

7. **Start the circulator:** When purging the system, it is recommended to run the circulator at full speed long enough to remove remaining air from the bearing chamber. This is especially important when installing the circulator in the off-season.

CAUTION: Never run the circulator dry or permanent damage may result.
ATTENTION: Ne laissez jamais le circulateur tourner à sec, des dommages permanents peuvent en résulter.

Full Speed Operation:

To run the pump at full speed during the fast fill, start-up and purge process, rotate dial to MAX speed setting. To return to the normal operating mode, turn dial to desired speed setting.

8. **Programming your 006e3 circulator:**

Note: The 006e3 is factory-programmed for Medium speed operating mode. If this is your desired operating mode, no programming changes are required. If flow velocity noise develops, turn dial counter-clockwise to reduce pump speed until noise disappears.

006e3 Operating Modes

- **3 Fixed Speed Settings ( ) - Low, Medium, High**
- **Pre-marked 003/006 equivalent settings**
- **Min-Max infinitely variable fixed speed settings for fine tuning**

To change operating speed settings:

Modify the performance of the circulator as needed by rotating the programming dial using a flat screwdriver. A blue LED will illuminate when the circulator is powered on. The LED will flash each time mode is changed. The selection of the right performance curve depends on the characteristics of the system and the actual flow and head requirements. See 006e3 Performance Curves and Setting Selection Guide on page 7 to determine best speed setting for the system.

CAUTION: Do not attempt to remove LED panel from circulator. Serious damage to circulator electronics may result.
ATTENTION: N'essayez pas de retirer le panneau de LED du circulateur. Des dommages sérieux à l'électronique du circulateur peuvent en résulter.

9. **Troubleshooting the error codes:** Listed below are potential diagnostic error codes which will appear on the LED display in case of a malfunction.

FAULTS	CONTROL PANEL	CAUSES	REMEDIES
The circulator is noisy	LED on	Suction pressure is insufficient - cavitation	Increase the system suction pressure within the permissible range.
	LED on	Presence of foreign bodies in the impeller	Disassemble the motor and clean the impeller.
Loud noises of water circulation	Flashing white LED	Air in the system	Vent the system. Repeat fill and purge steps.
	LED on	The flow is too high	Reduce the pump speed.
Circulator is not running although the electrical power supply is switched on	LED off	Lack of power supply	Verify voltage value of the electric plant. Verify the connection of the motor.
		One fuse in the installation is blown	Verify the fuses of the plant.
		The circulator is defective	Replace the pump.
		Overheating	Let the pump cool down for some minutes. Then try to re-start it. Verify that the water and ambient temperature are within the indicated temperature ranges.
	LED red	The rotor is blocked	Disassemble the motor and clean the impeller. See unblocking procedure below.
		Insufficient supply voltage	Verify that the power supply matches the data on the name plate.
Building does not get warm.	LED on	The circulator performance is too low	Increase the suction head. Increase speed.

Unblocking Procedure:

A red light in the LED indicates the circulator rotor is blocked or sticking. Turn the selector to the position MAX, disconnect and connect power supply to start the automatic release process. The circulator makes 100 attempts to restart (process lasts approximately 15 minutes). Every restart is signalled by a short flash of white LED light. If the blocking is not removed through the automatic release process after 100 attempts to restart, the circulator goes into standby and the LED remains solid red. Perform the manual unblocking steps described below.

1. Disconnect power supply - the warning light switches off.
2. Close both isolating valves and allow cooling. If there are no shut-off devices, drain the system so that the fluid level is beneath that of the circulator.
3. Loosen 4 motor bolts. Remove motor from casing. Carefully pull the rotor/impeller from the motor.
4. Remove impurities and deposits from the impeller and casing.
5. Reinsert the rotor/impeller into the motor.
6. Set the dial to the MAX position.
7. Connect power supply. Check for impeller rotation.
8. If the circulator still doesn't run it will need to be replaced.

Replacement Parts List

198-213 RP	Casing O-ring
198-214 RP	Wiring plug connector (green)
198-215 RP	Terminal box cover (black)
198-217 RP	Terminal box cover screws (5 per bag)

Union Fitting Options
(Sold seperately)

Part #	Description
UFS-050S	1/2” sweat tailpiece set
UFS-050T	1/2” npt tailpiece set
UFS-050P	1/2” press tailpiece set
UFS-075S	3/4” sweat tailpiece set
UFS-075T	3/4” npt tailpiece set
UFS-075P	3/4” press tailpiece set

Setting Selection Guide	
Based on 3/4" supply, 1/2" return copper pipe of equal length	
High	500 ft pipe
Medium	350 ft pipe
Low	200 ft pipe or less
NOTE: Figures are for reference purposes only. Refer to ASTM guidelines for piping flow & velocity standards. For PEX, refer to pipe manufacturer guidelines.	

006e3™ PERFORMANCE CURVES

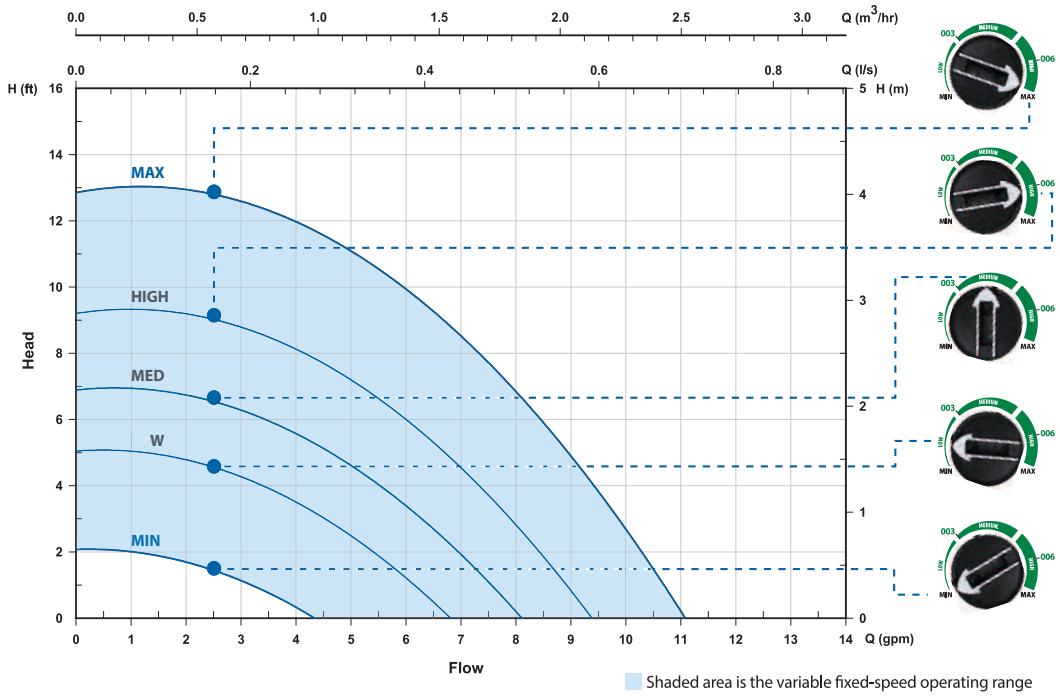

3 fixed speed settings ( ) (Low, Medium High) allows the installer to choose the speed and flow rate to precisely match system requirements. It also has infinitely variable speed settings between MIN/MAX to fine tune flows more precisely. Pre-marked 003/006 settings enable installers to set 006e3 to match standard 003 or 006 performance.

006e3 Replacement Chart

TACO	GRUNDFOS	WILO	B&G / XYLEM	ARMSTRONG	LAING
003 006	UP 15-18 UP 15-10 UP 10-16	Z-15	ecocirc e³-4 ecocirc e³-6 NBF-8, 9, 10, 12 SSF- 9, 12	Astro 225 BS Astro 225 SSU Astro 220 SSU	E1 Series E3 Series

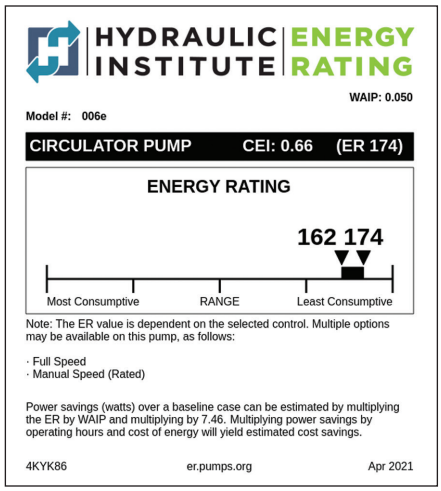

LIMITED WARRANTY STATEMENT

Taco, Inc. will repair or replace without charge (at the company's option) any Taco High Efficiency circulator or circulator part which is proven defective under normal use within three (3) years from the date of manufacture.

In order to obtain service under this warranty, it is the responsibility of the purchaser to promptly notify the local Taco stocking distributor or Taco in writing and promptly deliver the subject product or part, delivery prepaid, to the stocking distributor. For assistance on warranty returns, the purchaser may either contact the local Taco stocking distributor or Taco. If the subject product or part contains no defect as covered in this warranty, the purchaser will be billed for parts and labor charges in effect at time of factory examination and repair.

Any Taco product or part not installed or operated in conformity with Taco instructions or which has been subject to misuse, misapplication, the addition of petroleum-based fluids or certain chemical additives to the systems, or other abuse, will not be covered by this warranty.

If in doubt as to whether a particular substance is suitable for use with a Taco product or part, or for any application restrictions, consult the applicable Taco instruction sheets or contact Taco at (401-942-8000).

Taco reserves the right to provide replacement products and parts which are substantially similar in design and functionally equivalent to the defective product or part. Taco reserves the right to make changes in details of design, construction, or arrangement of materials of its products without notification.

TACO OFFERS THIS WARRANTY IN LIEU OF ALL OTHER EXPRESS WARRANTIES. ANY WARRANTY IMPLIED BY LAW INCLUDING WARRANTIES OF MERCHANTABILITY OR FITNESS IS IN EFFECT ONLY FOR THE DURATION OF THE EXPRESS WARRANTY SET FORTH IN THE FIRST PARAGRAPH ABOVE.

THE ABOVE WARRANTIES ARE IN LIEU OF ALL OTHER WARRANTIES, EXPRESS OR STATUTORY, OR ANY OTHER WARRANTY OBLIGATION ON THE PART OF TACO.

TACO WILL NOT BE LIABLE FOR ANY SPECIAL, INCIDENTAL, INDIRECT OR CONSEQUENTIAL DAMAGES RESULTING FROM THE USE OF ITS PRODUCTS OR ANY INCIDENTAL COSTS OF REMOVING OR REPLACING DEFECTIVE PRODUCTS.

This warranty gives the purchaser specific rights, and the purchaser may have other rights which vary from state to state. Some states do not allow limitations on how long an implied warranty lasts or on the exclusion of incidental or consequential damages, so these limitations or exclusions may not apply to you.

Taco Comfort Solutions® A Taco Family Company
Taco, Inc., 1160 Cranston Street, Cranston, RI 02920 | Tel: (401) 942-8000 | FAX: (401) 942-2360
Taco (Canada), Ltd., 8450 Lawson Road, Suite #3, Milton, Ontario L9T 0J8 | Tel: (905) 564-9422 | FAX: (905) 564-9436
Visit our web site: www.TacoComfort.com | Printed in USA | ©2021 Taco, Inc.