canplas PLUMBING

Submittal Sheet

Part Description:

2" ABS DWV Long Turn 45 Degree 1/8 Bend or Elbow, H X H

Part Number:

102502

Approvals and Listings maintained by:
Canplas Industries Ltd
Canada: 1-800-461-5300 USA: 1-888-461-5307

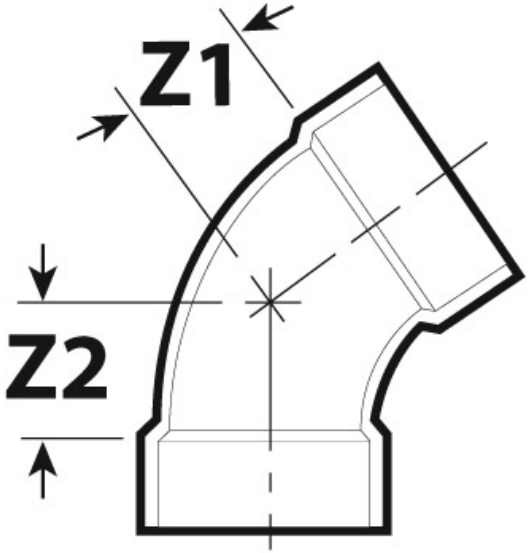

Part #	Part UPC	Colour	Size (inches)	Ctn Qty	Ctn Bar Code	Ctn. Wt (Kgs)	Ctn. Wt (lbs)	Skid Cubic (m)	Skid Cubic (ft)	Ctns/Skid
102502	662671101129	BLACK	2X2	50	10662671101126	4.80	10.56	1.65	58.33	36

Dimensions (inches)

Z1	Z2
1.44	1.44