Powertite™ Series Pin and Sleeve Plugs, Connectors and Receptacles

NEC/CEC:
Listed for Ordinary (Unclassified) Locations
NEMA 3, 3R, 4, 4X

Applications

- Designed to supply power to portable or fixed electrical equipment such as motor generator units, welders, pumps, compressors, cellular relay stations, SCR/VFD houses, and similar equipment.
- Ideal for use in "ship to shore" and backup/temporary power applications.
- Suitable for use in locations where a weatherproof enclosure is required.
- Rough usage construction.

Features

- Available in 30, 60, 100, 150, 200, and 400 Amp units.
- Available in two grounding styles: Style 1 (shell only) and Style 2 (shell and extra pole).
- Neoprene bushing compressed by cable collar prevents entrance of water. Bushing is highly resistant to hydrocarbon deterioration and is self-extinguishing.
- Locking screw and slot prevents plug cable collar from ”backing off.”
- Contacts exert constant pressure along entire contact surface and provide electrical continuity.
- Ambient temperature range of -25°C to +40°C (-13°F to +104°F).
- Insulating blocks provide greatest dielectric and mechanical strength and lowest arc tracking.
- Positive polarization: only plugs and receptacles of same style, number of poles and ampere rating can be used together.
- Circuit breaking: in 30, 60, 100, 150 and 200 Amp units, any arcing created as line and load terminals disengage is safely confined deep within terminal cavities. Plugs may be withdrawn in an emergency under full rated loads without separate disconnect switches (400 Amp plug is for disconnecting use only; not for current rupturing).
- 30, 60, 100, and 150 Amp Powertite™ plugs also suitable for classified locations when used with Appleton EBR, EBRH, JBR, MD2SR, or DBR explosionproof interlocking receptacles.
- Controlled length contacts ensure that ground makes first and breaks last for added safety.
- Intermatability ①: Intermateable with Crouse-Hinds ✣ Arktite® and Powermate™, and Killark ✧ Versamate®.

Standard Materials

- Plug, receptacle, connector and mounting box housings: copperfree (4/10 of 1% max.) aluminum
- Insulating blocks: glass filled polyester

Standard Finishes

- Aluminum plug, receptacle, connector and mounting box housings: epoxy powder coat
- Insulating blocks and contacts: natural finish

30 and 60 Amp

100 and 150 Amp

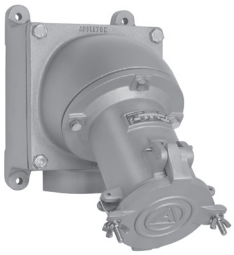

200 Amp

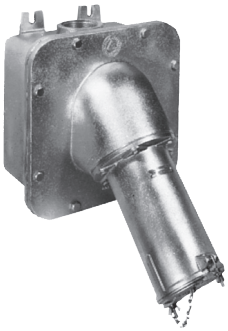

400 Amp

Options

- See Illustrated Options

NEC/CEC Certifications and Compliances

- UL Standard: UL 1682, UL 50E
- UL Listed: E145916, E145917
- cULus Listed: E145917 (200 Amp)
- CSA Standard: C22.2 No. 182.1-13
- CSA Certified: 065179
- NEMA 4X (30, 60, 100, 150, and 200 Amp)
- NEMA Configuration: FB11

Related Products

- For classified location plugs and receptacles, *see Plugs and Receptacles: Hazardous Location.*

① Classified by UL and Certified by CSA for use in specific combinations with Crouse-Hinds Arktite® or Killark Versamate®.
✣ Arktite is a registered trademark of Cooper Crouse-Hinds.
✧ Versamate is a registered trademark of Hubble Killark.

© December 2020

NEC/CEC:
Listed for Ordinary (Unclassified) Locations
NEMA 3, 3R, 4, 4X

Illustrated Features

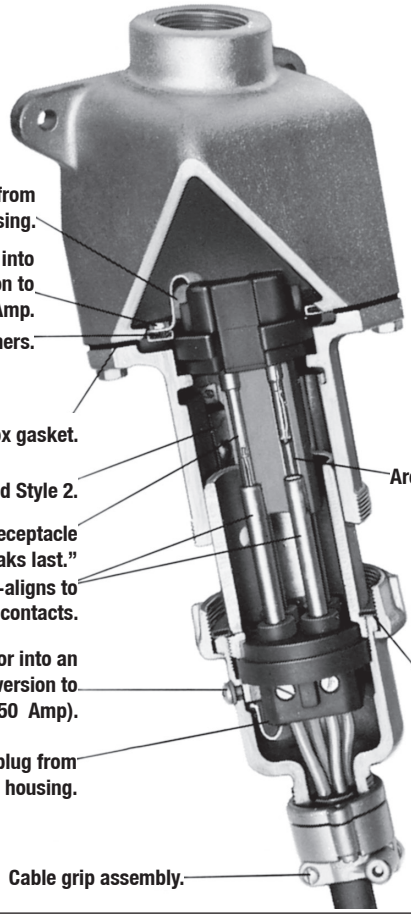

© December 2020

Powertite™ Series Pin and Sleeve Plugs, Connectors and Receptacles

NEC/CEC:
Listed for Ordinary (Unclassified) Locations
NEMA 3, 3R, 4, 4X

Illustrated Features

Grounding Styles

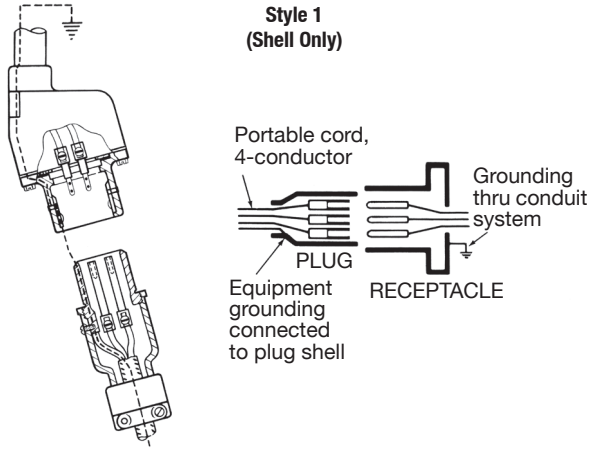

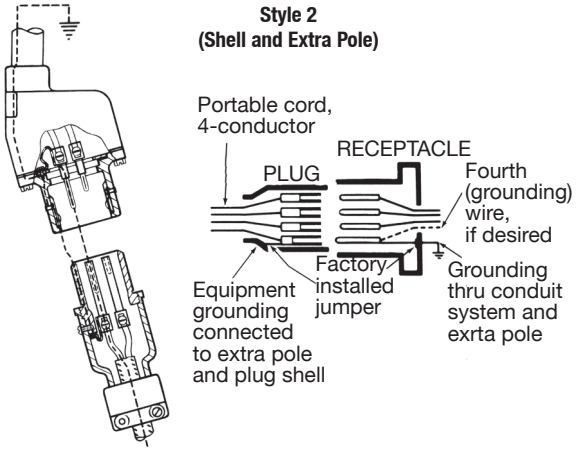

Plug—Equipment grounding conductor is wired directly to solderless lug which is connected to the plug housing with a pressure connector. All terminals are ”current carrying.”

Receptacle—Two detent spring clips engage the grounded plug housing on plug insertion-grounded plug shell makes contact with receptacle ground spring before line and load poles are engaged. Grounding path is maintained until after current-carrying contacts disengage. All terminals are ”current carrying.”

Plug—Equipment grounding conductor is not only connected to the solderless lug in the plug housing, but also to an extra grounding pole. Grounding pole has copper alloy grounding jumper strap that connects to plug housing.

Receptacle—Two detent spring clips engage grounded plug housing on plug insertion. Jumper from extra grounding pole is electrically connected to a screw on receptacle housing. Longer grounding pole ”makes first and breaks last.”

Pin and Sleeve Design ①

30, 60, and 100 Amp Pressure Wire Terminals.
Solid Brass Contacts with Beryllium Copper Springs.

150 Amp Pressure Wire Terminals.
Solid Copper Contacts with Beryllium Copper Springs.

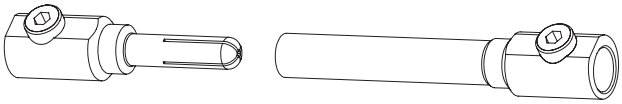

200 Amp Pressure Wire Terminals. Solid Copper Split–Type Contact.

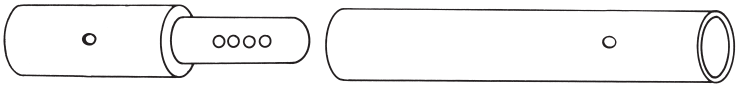

400 Amp 0.84” Solder Well Wire Terminals. Solid Copper Contacts with Four Spring–Loaded Borosilicate Bearings.

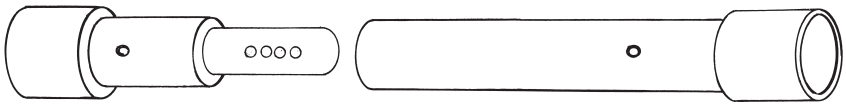

400 Amp 1.25” Solder Wire Well Terminals. Solid Copper Contacts with Four Spring–Loaded Borosilicate Bearings.

① Pins and sleeves are not sold separately. Must be purchased as entire interior replacement. Available on the Replacement Interiors pages.

© December 2020

Powertite™ Series Pin and Sleeve Plugs, Connectors and Receptacles

NEC/CEC:
Listed for Ordinary (Unclassified) Locations
NEMA 3, 3R, 4, 4X

Illustrated Features

Spring Door and Screw Cap
30, 60, 100, and 150 Amp spring door and screw cap receptacles are threaded to accept clamping ring ACP plug. The ring threads onto the receptacle to form a raintight assembly with plug in use-and also to prevent plug fallout. When the plug is withdrawn, the gasketed spring door cover closes tightly against receptacle opening automatically, providing weatherproof protection. Spring door has stainless steel spring and shaft.

Spring Door Cover Automatically Closes

Plug Threaded into Receptacle

Screw Cap

Plug with Clamping Ring

Spring Door Cover
30, 60, 100, and 150 Amp units may be located at any position in a 360° circle by adjusting a setscrew. Set screw also allows complete removal of cover. Spring door available on 200 Amp units.
NOTE: Spring Door cover in open positions for illustration only.

ACP Plugs
Supplied with bushings to accommodate a wide variety of cable diameters.

Reversible Cable Clamps
Permits wide cable range (just loosen screws and flip over). Each position accommodates one of two bushings. Convenient in installations having different cable sizes.

1st Position

2nd Position

Illustrated Options

Standard Service
Energized receptacle has recessed male contacts to reduce danger of accidental touching. Plug has female contacts that are energized only upon insertion in receptacle.

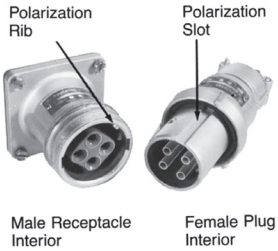

Special Polarization
Special polarization is available on 30, 60, 100, 200, and 400 Amp units. Prevents plug insertion in a receptacle or connector wired for a different voltage. In installations where there are different line voltages, the special polarization option is desirable. This allows only plugs and receptacles wired for the same line voltage to be mated together. The receptacle or connector interior is positioned 22-1/2°, relative to the polarization rivet, to the right (as specified) of standard, and plug is polarized to correspond. Add suffix -**P4** to the standard or reverse service plug, receptacle or connector.

Reverse Service (Generator Application)
Useful where a "hot" plug feeds a dead receptacle. Reverse service is often used for generator applications where the receptacle houses a dead plug interior. Plug houses an energized receptacle interior, which has recessed male contacts to reduce danger of accidental touching. 30, 60, 100, 150, and 200 Amp units can be easily converted to reverse service in the field when matching plug and receptacle are ordered. 400 Amp unit is only available as a factory assembled item at extra cost. Add suffix -**RS** to receptacle or connector.

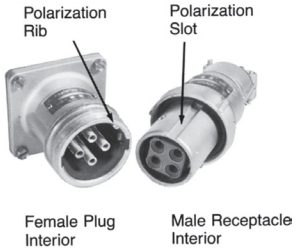

© December 2020

Powertite™ Series Pin and Sleeve Plugs, Connectors and Receptacles

NEC/CEC:
Listed for Ordinary (Unclassified) Locations
NEMA 3, 3R, 4, 4X

Features at a Glance

		Receptacle Types			Contacts				Reverse Service	
Amp	Grounding Styles	Weatherproof Spring Door	NEMA 4X Screw Cap	NEMA 4X Clamp Cover	Brass with Beryllium Copper Springs	Copper with Borosilicte Bearings	Split–type Copper Contacts	Brass Ground Contacts	In Field	Factory Only
30	1 and 2	X	X		X			Style 2	X	
60	1 and 2	X	X		X			Style 2	X	
100	1 and 2	X	X		X			Style 2	X	
150	2	X	X		X ①			Style 2	X	
200	1 and 2	X ▼		X			X	Style 2	X	
400	1 and 2					X		Style 2		X

Application Chart

Grounding Style	Wire/Pole	Single Phase With Neutral	Single Phase Without Neutral
Style 1 (Shell Only)	2W, 2P	L1+N+G	L1+L2+G
	3W, 3P	L1+L2+N+G	
	4W, 4P		
Style 2 (Shell and Extra Pole)	2W, 3P	L1+N+G	L1+L2+G
	3W, 4P	L1+L2+N+G	

Grounding Style	Wire/Pole	Three Phase With Neutral	Three Phase Without Neutral
Style 1 (Shell Only)	2W, 2P		
	3W, 3P		L1+L2+L3+G
	4W, 4P	L1+L2+L3+N+G	
Style 2 (Shell and Extra Pole)	2W, 3P		
	3W, 4P		L1+L2+L3+G

Powertite™ Horsepower Ratings *Plug may be withdrawn in an emergency if within these maximum HP ratings. Not for normal starting/stopping.*

Phase Motor	Amps	Motor Horsepower 115 Vac	230 Vac	480 Vac	600 Vac
For Emergency Disconnect Only					
3-Phase 3W, 3P; 3W, 4P; or 4W, 4P	30	3	7-1/2	15	20
	60	7-1/2	15	30	30
	100	10	20	40	40
	150	Do Not Disconnect Under Load			
	200	20	40	50	50

Phase Motor	Amps	Motor Horsepower 115 Vac	230 Vac	480 Vac	600 Vac
1-Phase 2W, 2P or 2W, 3P	30	2	3	10	10
	60	3	10	20	20
	100	7-1/2	15	30	30
	200	15	30	40	40

Range of Wire Sizes Accommodated in Powertite™ Plug and Receptacle Terminals

60 °C (140 °F) minimum wire ratings.

30, 60, 100, and 150 Amp				200 Amp			400 Amp		
Amps	Wire Recess Dia. (Inches)	Wire Range Building	Wire Range Extra Flex.	Wire Recess Dia. (Inches)	Conductor Size	Type Conductor	Solder Recess Dia. (Inches)	Conductor Size	Type Conductor
30	.281	#10 – #6	#10 – #8	0.687	250	General Wire	0.84	500 MCM	General Wire
60	.312	#6 – #2	#6 – #4		4/0	General Wire		400 MCM	Flex. Cable
100	.391	#4 – #1	#4 – #2		4/0	Flex. Cable		400 MCM	Extra Flex.
150	.525	#2 – 2/0	#2 – 2/0		3/0	Flex. Cable	1.25	1000 MCM	General wire
					3/0	Extra Flex.		900 MCM	General Wire
					2/0	Flex. Cable		800 MCM	Extra Flex.

▼ *NEMA 4X.*
① *Copper with beryllium copper springs.*

© December 2020

Powertite™ 100 and 150 Amp Pin and Sleeve Plugs and Receptacles

600 Vac, 250 Vdc, 50-400 Hz

Pressure Wire Terminals – 100 Amp: Wire Recess Diameter: .391". Wire Size Range: #4—#1 Building; #4—#2 Extra Flex.
150 Amp: Wire Recess Diameter: .525". Wire Size Range: #2—2/0 Building; #2—#2/0 Extra Flex.

NEC/CEC:
Listed for Ordinary (Unclassified) Locations
NEMA 3, 3R, 4, 4X

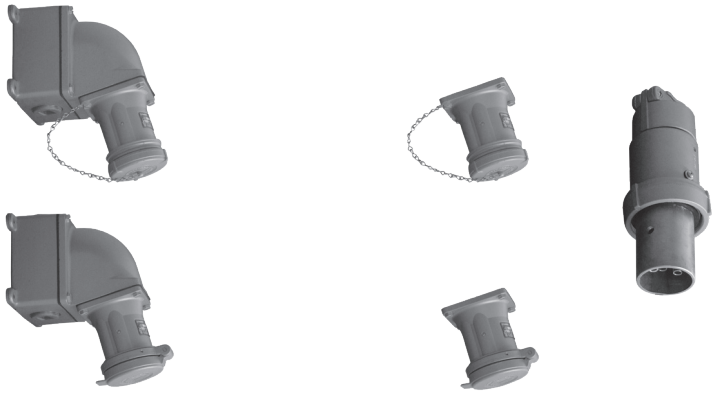

Grounding Style	Wire/Pole	Receptacle with AJA Mounting Box ①	Hub Size (Inches)	Receptacle Only ③	Clamping Ring Plug ②	Plug Cable Dia. (Inches)
100 Amp Style 1 (Shell Only)	2W, 2P	**ADJA1022-125**	1-1/4	**ADR1022**	**ACP1022CD**	.875 to 1.906
		ADJA1022-150	1-1/2			
	3W, 3P	**ADJA1033-125**	1-1/4	**ADR1033**	**ACP1033CD**	.875 to 1.906
		ADJA1033-150	1-1/2			
	4W, 4P	**ADJA1044-150**	1-1/2	**ADR1044**	**ACP1044CD**	.875 to 1.906
		ADJA1044-200	2			
100 Amp Style 2 (Shell and Extra Pole)	2W, 3P	**ADJA1023-125**	1-1/4	**ADR1023**	**ACP1023CD**	.875 to 1.906
		ADJA1023-150	1-1/2			
	3W, 4P	**ADJA1034-150**	1-1/2	**ADR1034**	**ACP1034CD**	.875 to 1.906
		ADJA1034-200	2			
150 Amp Style 2 (Shell and Extra Pole)	3W, 4P	**ADJA15034-150**	1-1/2	**ADR15034**	**ACP15034CD**	.875 to 1.906
		ADJA15034-200	2		**ACP15034DE**	1.250 to 2.187

Receptacles are provided with spring door and screw cover.
*For Reverse Service, add suffix -**RS** to Catalog Number.*
*For Special Polarization for 100 Amp units, add suffix -**P4** to Catalog Number. (Not available for 150 Amp units.)*

Horsepower Ratings for Emergency Disconnect Under Load

Not for normal starting and stopping, but plug may be withdrawn in an emergency if within these maximum HP ratings.

Amp	Motor Phase	Wire/Pole	Motor Horsepower 120 Vac	240 Vac	480 Vac	600 Vac
100	1-Phase	2W, 2P or 2W, 3P	7-1/2HP	15HP	30HP	30HP
	3-Phase	3W, 3P; 3W, 4P; or 4W, 4P	10HP	20HP	40HP	40HP
150	3-Phase	3W, 4P	Do Not Disconnect Under Load			

① For additional mounting boxes, see Aluminum Mounting Boxes.
② Plug and receptacle combination is NEMA 4X rated when clamping ring is fully tightened on receptacle.
③ Receptacle is NEMA 4X rated when screw cover is fully engaged when the receptacle is not in use.

© December 2020

Powertite™ 100 and 150 Amp Pin and Sleeve Connectors and Plugs

600 Vac, 250 Vdc, 50-400 Hz

Pressure Wire Terminals – 100 Amp: Wire Recess Diameter: .391". Wire Size Range: #4—#1 Building; #4—#2 Extra Flex.
150 Amp: Wire Recess Diameter: .525". Wire Size Range: #2—2/0 Building; #2—#2/0 Extra Flex.

NEC/CEC:
Listed for Ordinary (Unclassified) Locations
NEMA 3, 3R, 4, 4X

Grounding Style	Wire/Pole	Connector Body Only	Clamping Ring Plug ①	Connector/Plug Cable Dia. (Inches)
100 Amp Style 1 (Shell Only)	2W, 2P	**ARC1022CD**	**ACP1022CD**	.875 to 1.906
	3W, 3P	**ARC1033CD**	**ACP1033CD**	.875 to 1.906
	4W, 4P	**ARC1044CD**	**ACP1044CD**	.875 to 1.906
100 Amp Style 2 (Shell and Extra Pole)	2W, 3P	**ARC1023CD**	**ACP1023CD**	.875 to 1.906
	3W, 4P	**ARC1034CD**	**ACP1034CD**	.875 to 1.906
150 Amp ② Style 2 (Shell and Extra Pole)	3W, 4P	**ARC15034CD**	**ACP15034CD**	.875 to 1.906
	3W, 4P	**ARC15034DE**	**ACP15034DE**	1.250 to 2.187

*For Reverse Service, add suffix -**RS** to Catalog Number.*
*For Special Polarization for 100 Amp units, add suffix -**P4** to Catalog Number. (Not available for 150 Amp units.)*

Pin and Sleeve Design

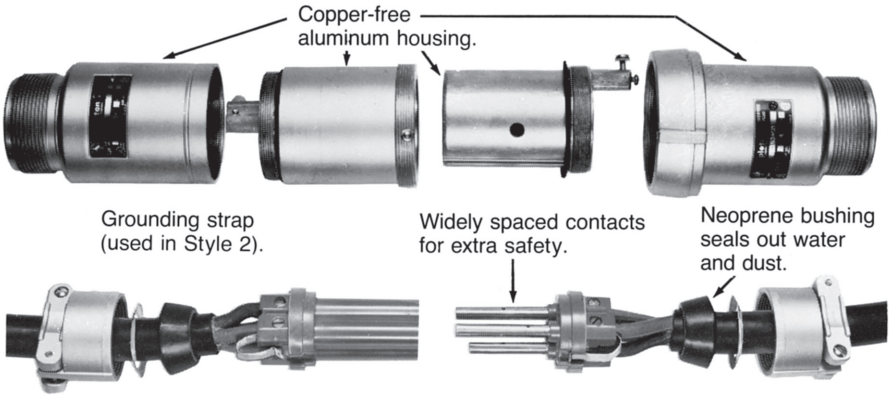

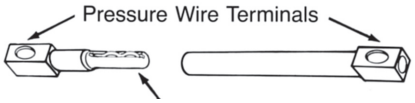

Solid Brass (100A) or Copper (150A) Contact with Beryllium Copper Springs

Energized contacts deeply recessed to reduce danger of accidental touching, minimize possibility of exposed arcs. Insulator quenches arcing, and is resistant to abnormal heat and to fire.

Plug mechanical cable clamps provide strain relief at conductor connections, allow easy cable replacement.

Pressure wire terminals allow cable to be readily replaced when necessary. Terminal screws grip conductors firmly. Spring contacts provide constant pressure.

① Plug and receptacle combination is NEMA 4X rated when clamping ring is fully tightened on receptacle.
② Powertite 150 Amp ARC connectors are not UL listed or CSA certified.

© December 2020