For Non-Health Hazard Applications

Job Name _____ Contractor _____

Job Location _____ Approval _____

Engineer _____ Contractor's P.O. No. _____

Approval _____ Representative _____

Piping / Recirculation Diagram

Lavatory Valves

No Recirculation

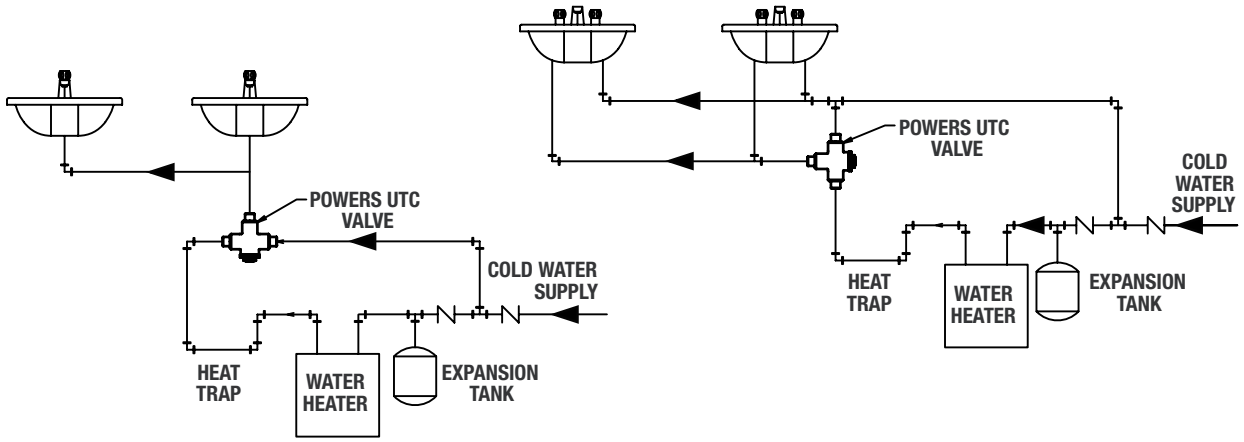

Low/High Temp Recirculation

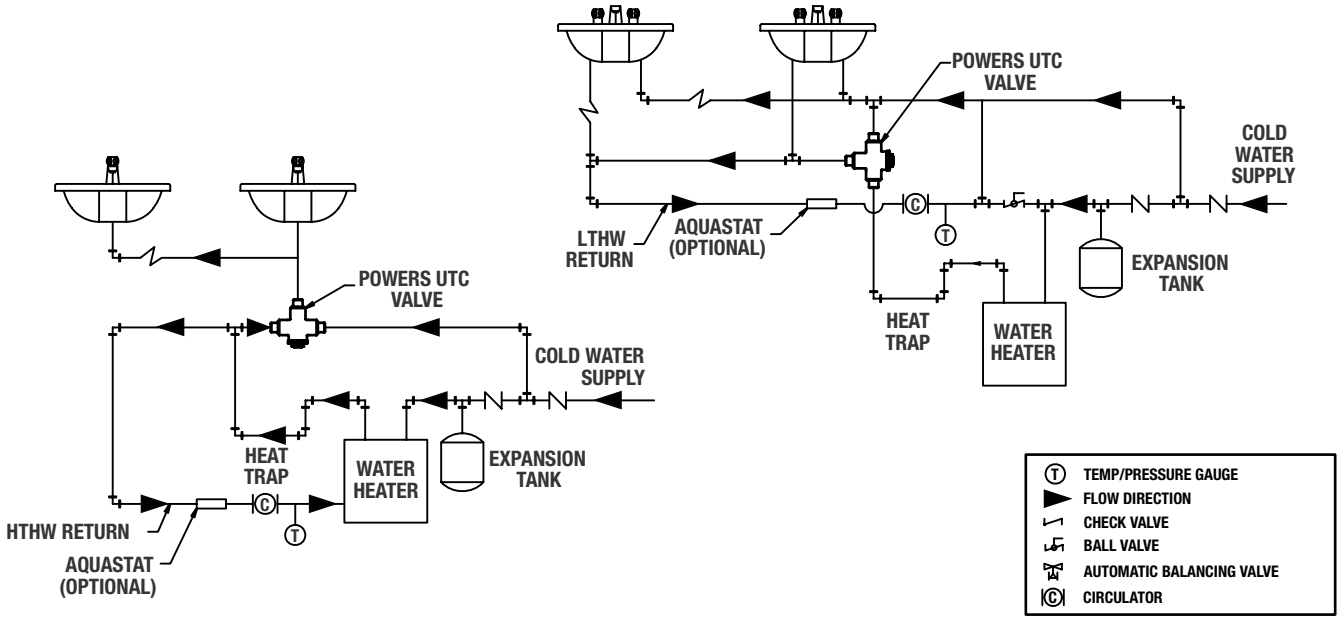

Powers product specifications in U.S. customary units and metric are approximate and are provided for reference only. For precise measurements, please contact Powers Technical Service. Powers reserves the right to change or modify product design, construction, specifications, or materials without prior notice and without incurring any obligation to make such changes and modifications on Powers products previously or subsequently sold.

POWERS™

A WATTS Brand

USA: Tel: (800) 669-5430 • Fax: (847) 229-0526 • PowersControls.com
Canada: Tel: (905) 332-4090 • Fax: (905) 332-7068 • PowersControls.ca
Latin America: Tel: (52) 81-1001-8600 • PowersControls.com

© 2017 Powers