Clean Ream Extreme® Plastic Pipe Fitting Reamers

PIPE TOOLS & VISES
SINCE 1896

Replacement Parts

PPR75, PPR100, PPR125, PPR150, PPR200, PPR250, PPR300, PPR400

Applies to: 04520, 04521, 04522, 04523, 04524, 04525, 04526, 04527, 04528, 04529, 04532

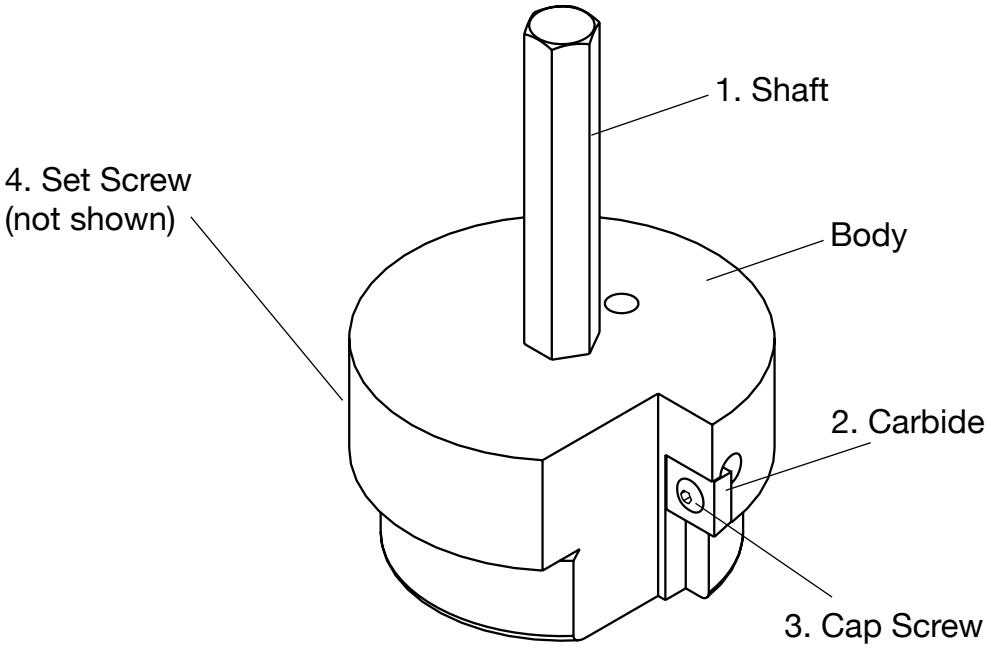

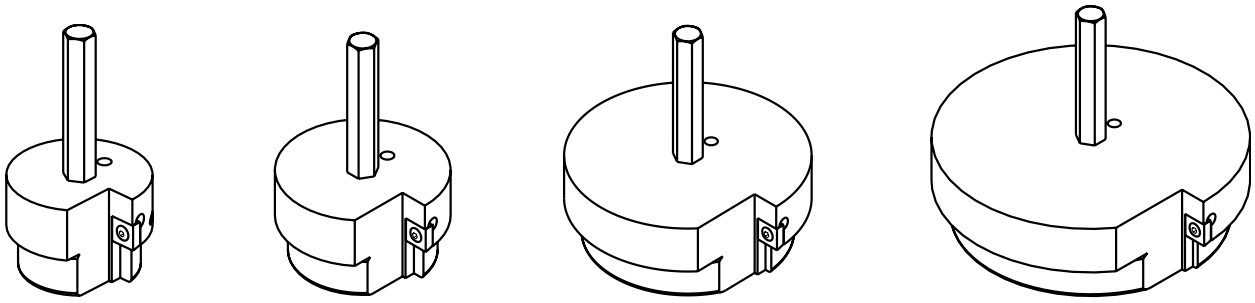

1 1/2" 2" 3" 4"

WARNING: 3” and 4” fitting borers create a large reaction torque that can cause injury to operator. Use caution when using these tools. A standard 1/2”, right angle drill is recommended.

Note: Carbide insert has four cutting edges. Change cutting edge by removing the cap screw and rotating the carbide 180° then reinsert cap screw and tighten.

Parts List

Ref. No.	Description	¾” - 1” Item Code	1-¼” - 4” Item Code	Qty.
1	SHAFT	44525	44524	1
2	CARBIDE	24523	24524	1
3a	8-32 CAP SCREW	—	24525	1
3b	4-40 CAP SCREW	24522	—	1
4	1/4” - 20 SET SCREW	30087	30087	1

Reed Manufacturing
1425 West 8th Street
Erie, PA 16502 USA

QUALITY & Service that Last a Lifetime

Phone: 800-666-3691 or +1-814-452-3691
reedsales@reedmfgco.com
www.reedmfgco.com