canplas PLUMBING

Submittal Sheet

Part Description:

2" X 1-1/2" X 1-1/2" PVC WHITE DWV Sanitary Tee H X H X H

Part Number:

192128L

Approvals and Listings maintained by:
Canplas Industries Ltd
Canada: 1-800-461-5300 USA: 1-888-461-5307

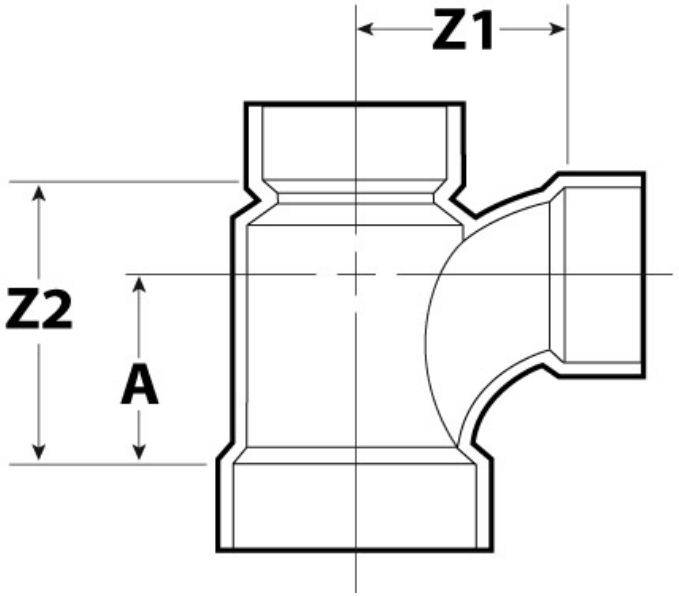

Part #	Part UPC	Colour	Size (inches)	Ctn Qty	Ctn Bar Code	Ctn. Wt (Kgs)	Ctn. Wt (lbs)	Skid Cubic (m)	Skid Cubic (ft)	Ctns/Skid
192128L	662671191410	WHITE	1-1/2X2X1-1/2	50	10662671191417	9.56	21.03	1.86	65.82	32

Dimensions (inches)

A	Z1	Z2
1.93	2.13	3.10