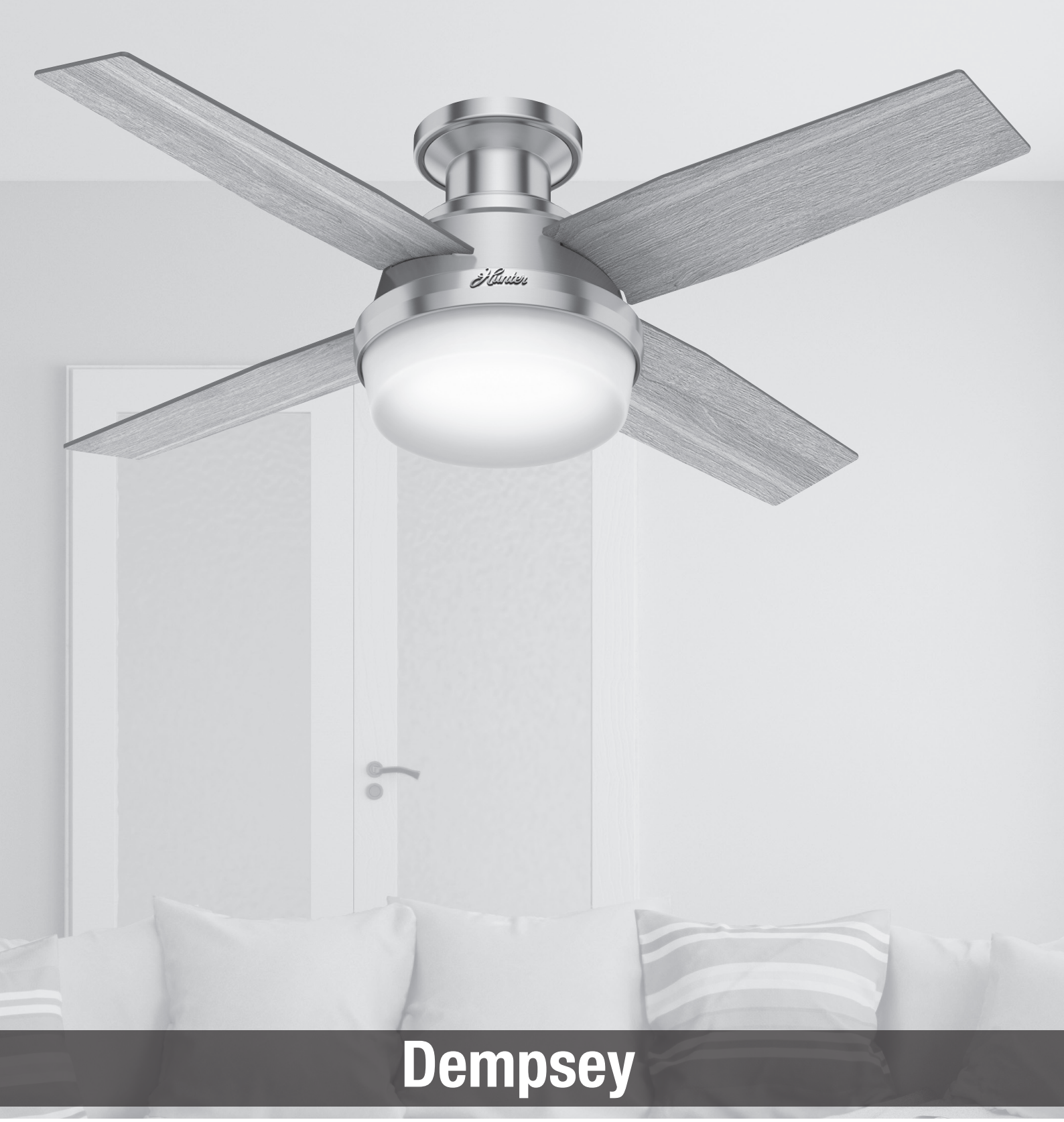

Dempsey

Installation Manual

Model:	50282	Brushed Nickel
	59243	Brushed Nickel
	59244	Fresh White
	59445	Noble Bronze

Fan weight ±2 lbs: 18.3 lbs (8.3 kg)

Hunter®

©2019 Hunter Fan Co.

PG3773 r042519

Congratulations on purchasing your new Hunter® ceiling fan!

The ceiling fan you purchased will provide comfort and performance in your home or office for many years. This instruction manual contains complete instructions for installing and operating your fan. We are proud of our work and appreciate the opportunity to supply you with the best ceiling fan available anywhere in the world.

We are here to help!

This Instruction Manual is designed to make installation as simple as possible. While working through this Instruction Manual, keep your smartphone or tablet nearby. We have added video links to help you through the more technical sections. If you are unfamiliar or uncomfortable with wiring, contact a qualified electrician. We also provide telephone support at 1.888.830.1326 or visit us at HunterFan.com.

READ and SAVE These Instructions

⚠ WARNING

Warning

w.1 - To reduce the risk of fire, electrical shock, or personal injury, mount fan directly from building structure and/or an outlet box marked acceptable for fan support of 70 lbs (31.8 kg) and use the mounting screws provided with the outlet box.

w.2 - To avoid possible electrical shock, before installing or servicing your fan, disconnect the power by turning off the circuit breakers to the outlet box and associated wall switch location. If you cannot lock the circuit breakers in the off position, securely fasten a prominent warning device, such as a tag, to the service panel.

w.3 – To reduce the risk of electric shock, this fan must be installed with an isolating wall control/switch.

w.4 - To reduce the risk of personal injury, do not bend the blade brackets when installing the blade brackets, balancing the blades, or cleaning the fan. Do not insert foreign objects in between rotating fan blades.

w.5 - Chemical burn hazard. Keep batteries away from children. This remote contains a lithium button cell battery. If a new or used lithium button/coin cell battery is swallowed or enters the body, it can cause severe internal burns and can lead to death in as little as 2 hours. Always completely secure the battery compartment. If the battery compartment does not close securely, stop using the product, remove the batteries, and keep it away from children. If you think batteries might have been swallowed or placed inside any part of the body, seek immediate medical attention. Dispose of cells properly and keep away from children. Even used cells may cause injury.

Caution

c.1 - All wiring must be in accordance with national and local electrical codes ANSI/NFPA 70. If you are unfamiliar with wiring, use a qualified electrician.

c.2 - Use only Hunter replacement parts.

This equipment has been tested and found to comply with the limits for a Class B digital device, pursuant to part 15 of the FCC Rules. These limits are designed to provide reasonable protection against harmful interference in a residential installation. This equipment generates, uses and can radiate radio frequency energy and if not installed and used in accordance with the instructions may cause harmful interference to radio communications.

However, there is no guarantee that interference will not occur in a particular installation. If this equipment does cause harmful interference to radio or television reception, which can be determined by turning the equipment off and on, the user is encouraged to try to correct the interference by one or more of the following measures:

- Reorient or relocate the receiving antenna.
- Increase the separation between the equipment and receiver.
- Connect the equipment into an outlet on a circuit different from that to which the receiver is connected.
- Consult the dealer or an experienced radio/TV technician for help.

Caution: modifications not approved by the party responsible for compliance could void user's authority to operate the equipment.

This device complies with Part 15 of the FCC Rules. Operation is subject to the following two conditions: (1) This device may not cause harmful interference, and (2) this device must accept any interference received, including interference that may cause undesired operation.

This product conforms to UL Standard 507.

c ETL Listed us
Intertek

Here are the tools you'll need to complete your installation:

Ladder

Screwdriver

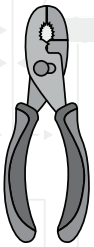
Pliers

Wire Strippers

OPTIONAL

If mounting to a support structure, you will also need these tools.

Drill

9/64" Drill Bit

Here is what comes in your box:

We recommend that you pull everything out of the box and lay it out. We have grouped the drawn components below with the hardware you'll need for those parts. The screws below are drawn to scale to make it easier to identify what piece of hardware is needed to install each component.

Hunter Pro Tip:

Do not discard the hardware bags or mix parts from different bags. Make note of the symbol printed on each hardware bag. The symbols can be used to identify the appropriate hardware for each step.

BAG

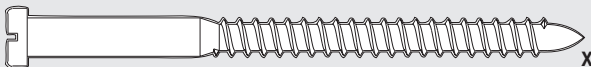

Wood Screw x2

Washer x2

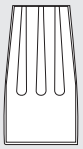

Wire Nut x4

For installing the hanger bracket and wiring the fan

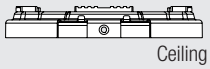

Ceiling Bracket

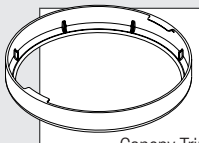

Canopy Trim Ring

BAG

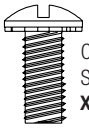

Canopy Screw x3

Top Housing Screw x3

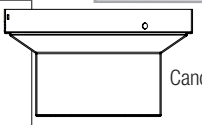

Canopy

Grounding Screw x1

For installing the canopy

BAG

Blade Washer x12

BAG

Blade Screw x12

Blade x4

For installing the blades

Upper Motor Housing

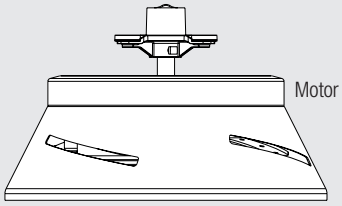

Motor

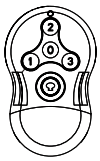

Remote Control

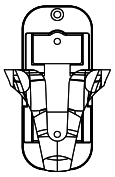

Remote Cradle

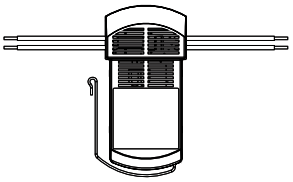

Remote Receiver

Remote Components

BAG

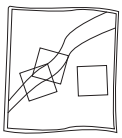

Spare Parts

For your convenience, you may receive extra fasteners.

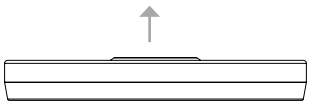

Upper Switch Housing

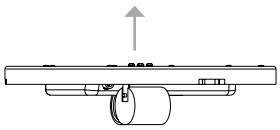

Light Kit Assembly

x2

BAG

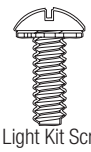

Light Kit Screw x6

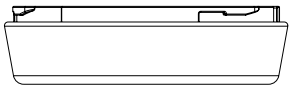

Glass

For installing the light kit

Find a part that is missing or damaged?
Don't take it back to the store. Let us make it right. Visit us at HunterFan.com or call us at 1.888.830.1326.

Choosing the Right Installation Location

You probably bought this fan with a location in mind. Let's check below to make sure it is a good fit.

Check the room dimensions:

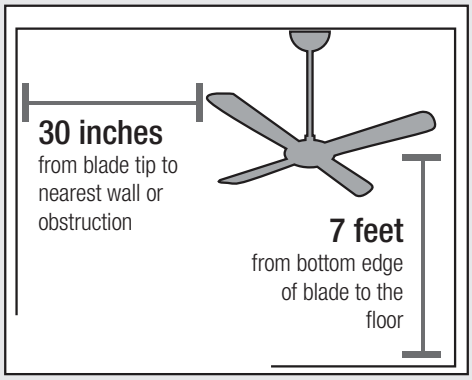

Check the outlet box:

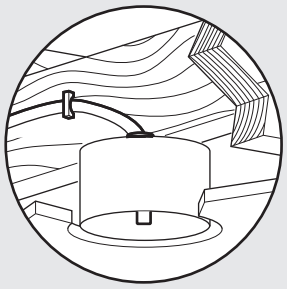

You must be able to secure the fan to building structure or fan-rated outlet box.

Installing the Ceiling Bracket

You have **two options** for installation. Pick which one works best for your location. Remove any existing bracket prior to installation. **Only use the provided Hunter ceiling bracket that came in your fan's box.**

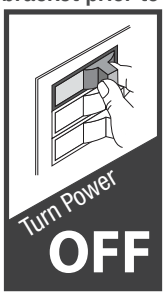

Do this first!

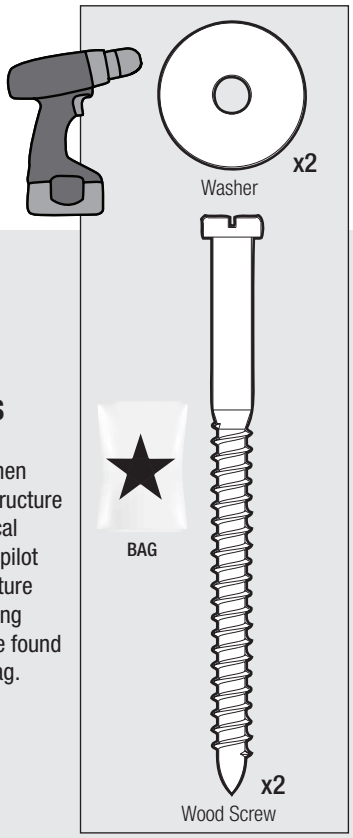

Option 1: Machine Screws

Use machine screws *(provided with outlet box)* and washers when securing to existing ceiling fan-rated outlet box. Make sure it is securely installed and is acceptable for fan support of 31.8 kg (70 lbs) or less.

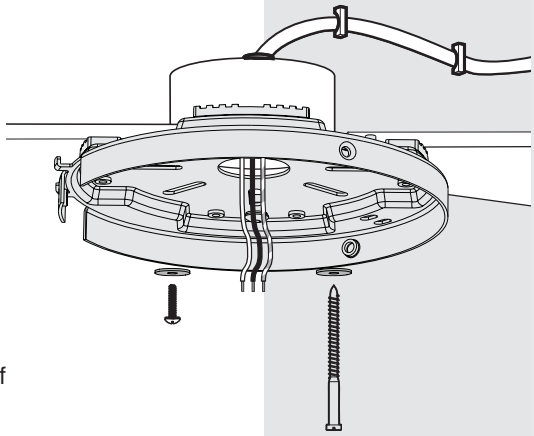

Option 2: Wood Screws

Use wood screws and washers (included) when securing to support structure with approved electrical outlet box. Drill 9/64" pilot holes in support structure to aid in securing ceiling bracket with hardware found in the ★ hardware bag.

Hunter Pro Tip:

The machine screws are the ones that came with your outlet box.

Installing the Top Housing

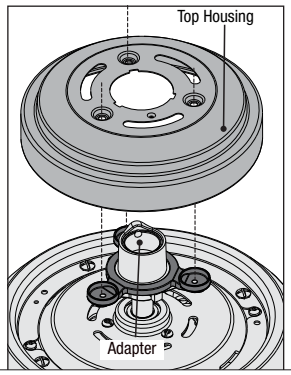

Thread the wires through the top housing. Place the top housing onto the motor housing so that the holes in the top housing lineup with the holes in the motor housing and the adapter.

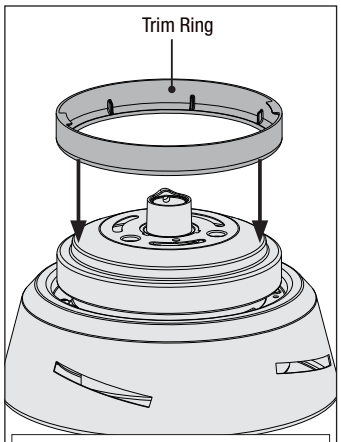

Rest the trim ring on the top housing.

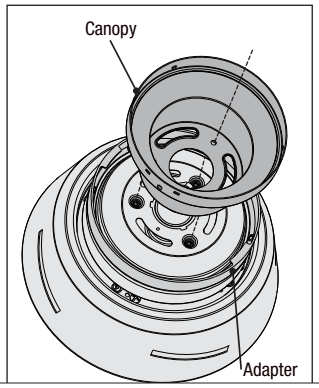

Place the canopy on the top housing. Ensure all four screw holes line up with the screw holes in both the top housing and the adapter.

Installing the Top Housing

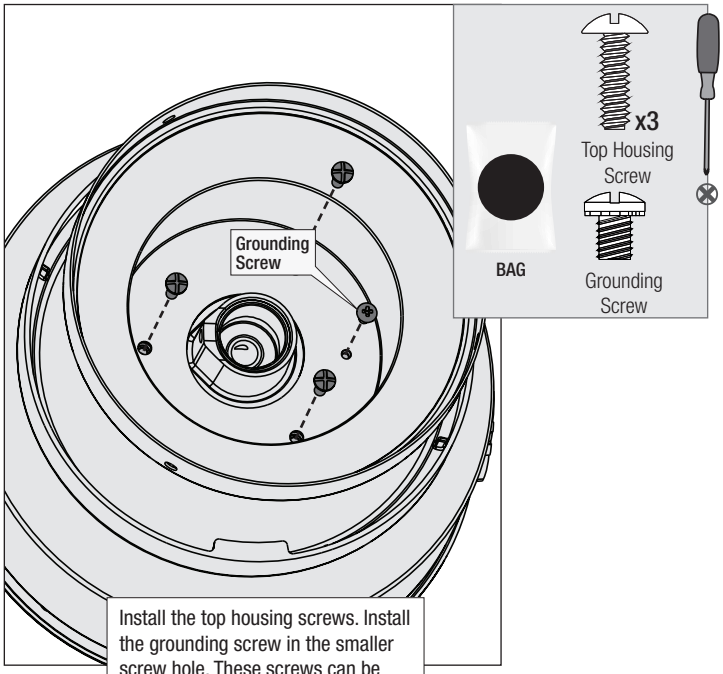

Install the top housing screws. Install the grounding screw in the smaller screw hole. These screws can be found in the ● hardware bag.

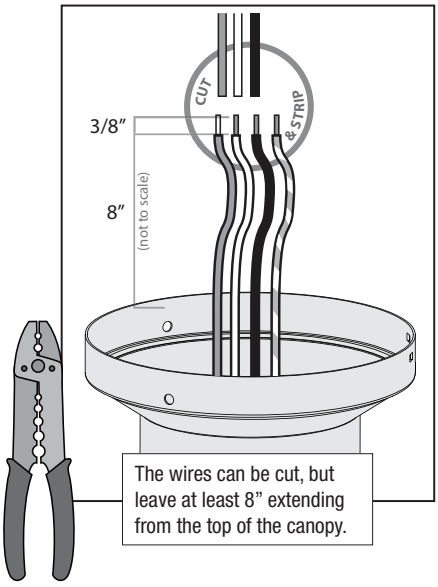

The wires can be cut, but leave at least 8" extending from the top of the canopy.

Hanging the Fan

NOTICE

To prevent damage to fan, ALWAYS lift holding the fan housing.

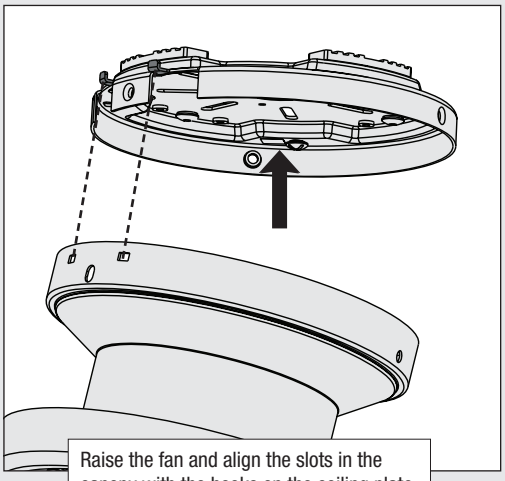

Raise the fan and align the slots in the canopy with the hooks on the ceiling plate.

Note: To hang the fan, you must tilt the canopy to an almost vertical position so that the canopy slots sit on the ceiling plate hooks.

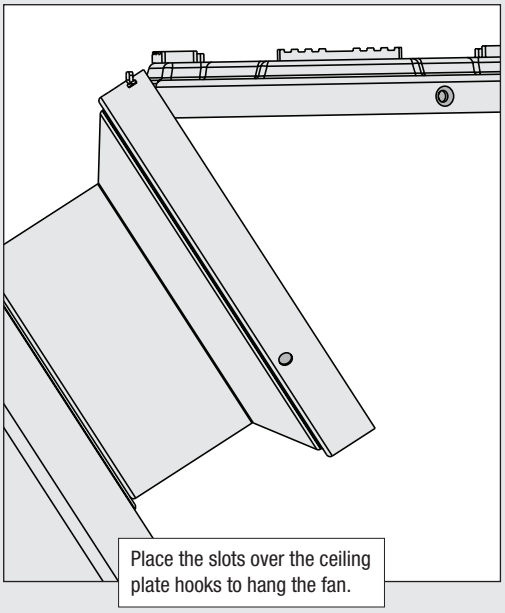

Place the slots over the ceiling plate hooks to hang the fan.

We know wiring is hard. Let's make it easier.

Follow these steps to get your fan wired quickly and safely. Follow the route below that best matches your wall switch setup. If you are unfamiliar with wiring or uncomfortable doing it yourself, please contact a qualified electrician.

You are going to need these:

4 Wire Nuts (these are in the ★ bag)

Hunter Pro Tip:

Here is how to connect the wires:
Push the bare metal ends of the wires together and slide a wire nut over them. Then, twist the wire nut clockwise until tight. **Give it a gentle pull to make sure none of the wires are loose.**

STEP 1

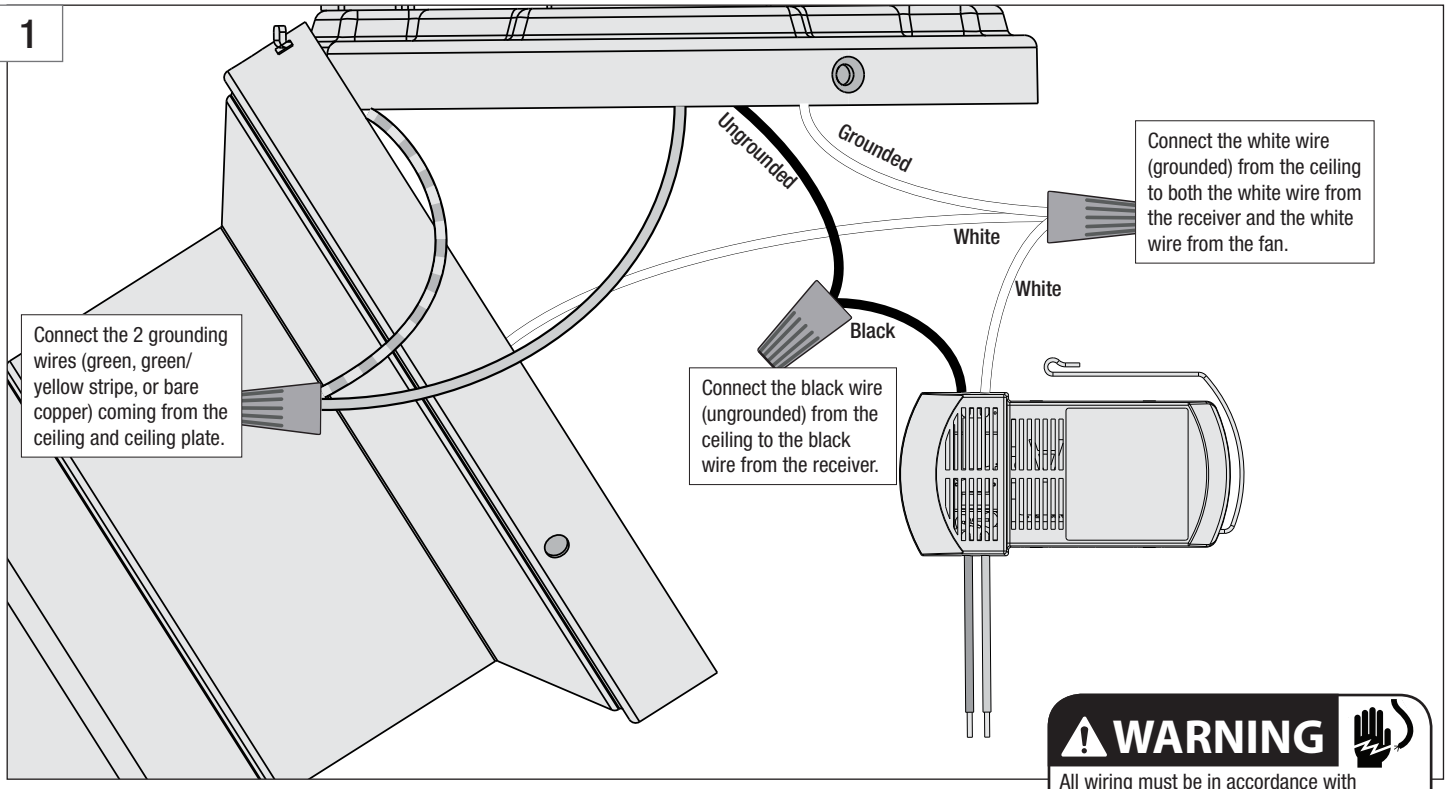

⚠ WARNING

All wiring must be in accordance with national and local electrical codes ANSI/NFPA 70. If you are unfamiliar with wiring or in doubt, consult a qualified electrician.

STEP 2

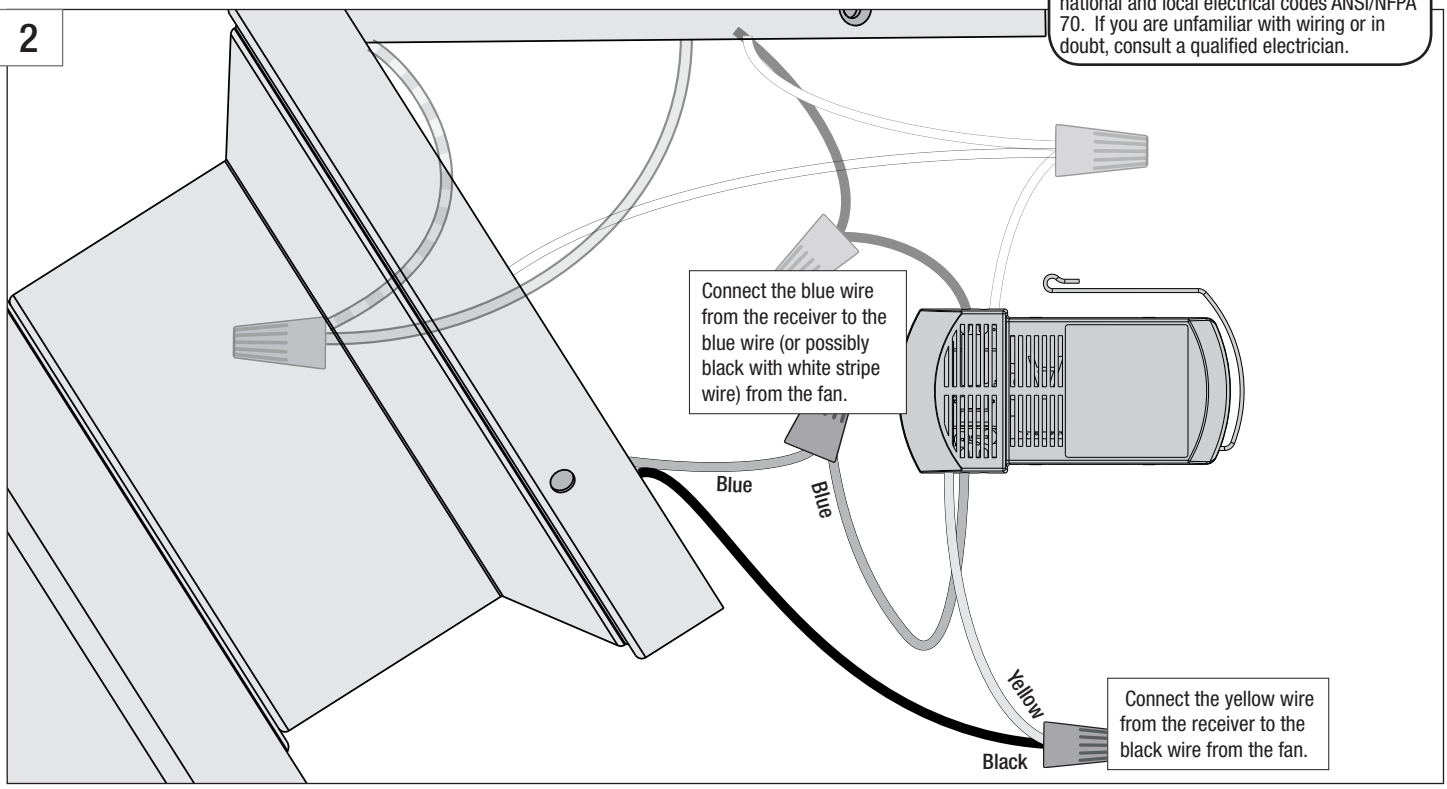

Installing the Canopy

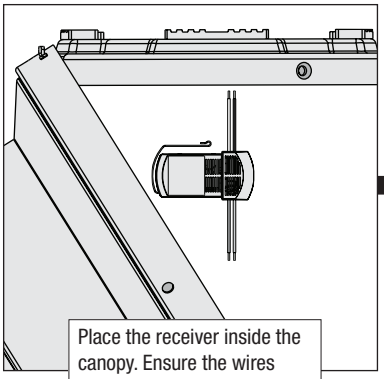

Place the receiver inside the canopy. Ensure the wires remain connected.

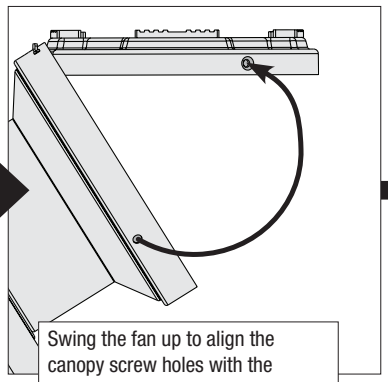

Swing the fan up to align the canopy screw holes with the mounting holes on the ceiling plate.

Note: The slots in the canopy must remain engaged while swinging the canopy for alignment.

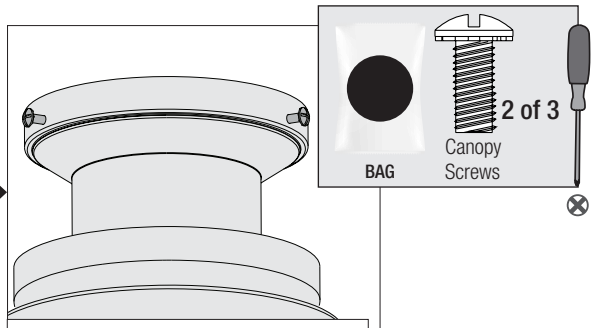

Hold the canopy up with the screw holes aligned. Partially install two canopy screws, found in the ● hardware bag, into the holes opposite the ceiling plate hooks.

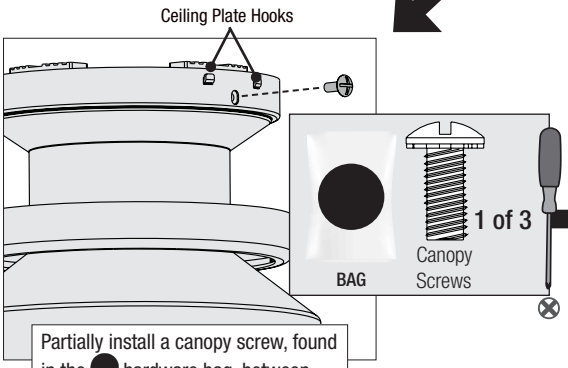

Partially install a canopy screw, found in the ● hardware bag, between the ceiling plate hooks. When all the holes are properly aligned, securely tighten all three canopy screws.

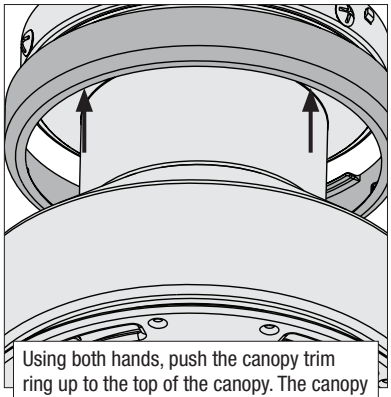

Using both hands, push the canopy trim ring up to the top of the canopy. The canopy trim ring will snap and lock into place.

Note: Should you need to remove the trim ring, press firmly on opposite sides of the trim ring. The tabs will flex out releasing the canopy trim ring.

⚠ WARNING

FAN FALL HAZARD
Make sure screws are tight.

Installing the Blades:

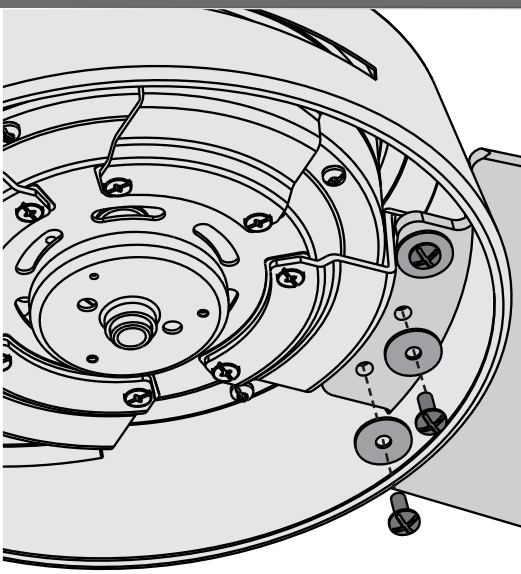

Attach each blade to a blade iron using the blade washers, found in the ■ hardware bag, and the blade assembly screws, found in the ▲ hardware bag.

Repeat x4

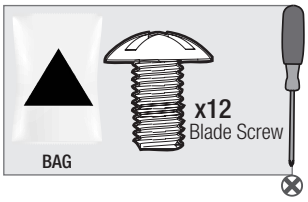

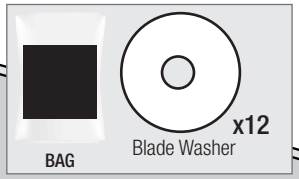

Assembling the Switch Housing

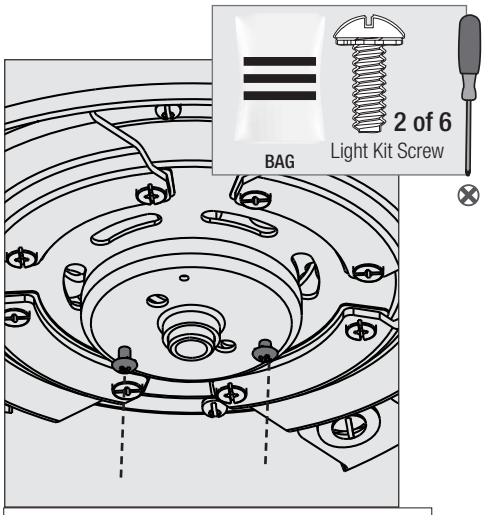

Screw two housing assembly screws from the ≡ hardware bag halfway into the motor housing. It does not matter which two screw holes you choose.

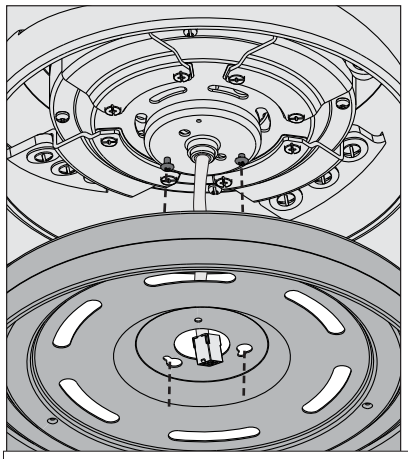

Feed the wire plug through the center hole of the hood, then wrap keyhole slots around the screws and twist counterclockwise.

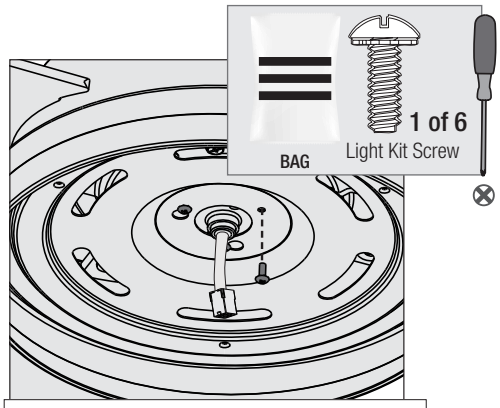

Insert the third screw, found in the ≡ hardware bag, into place and then tighten all three screws.

⚠ WARNING

FAN FALL HAZARD
Make sure the hood is securely attached to the mounting plate. Failure to properly secure all 3 assembly screws could result in the switch housing fixture falling.

Assembling the Light Kit

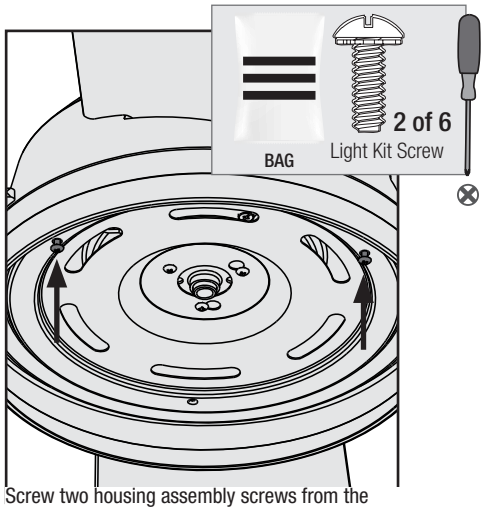

Screw two housing assembly screws from the ≡ hardware bag halfway into the upper switch housing. It does not matter which two screw holes you choose.

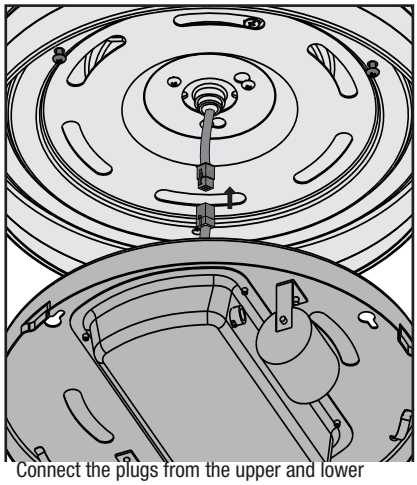

Connect the plugs from the upper and lower switch housings. Make sure to line up the colored markings on the connectors.Wrap light kit keyhole slots around the screws and twist counterclockwise.

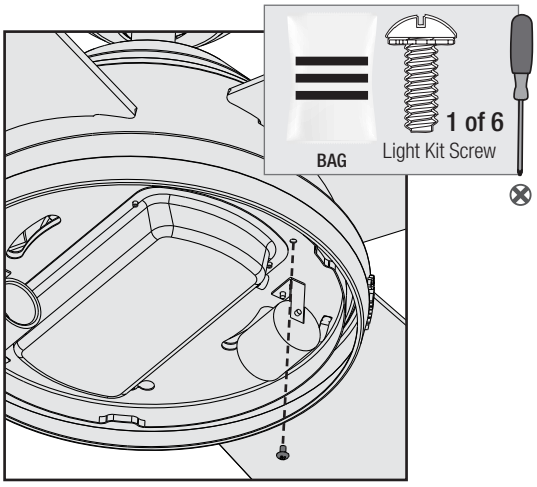

Install the third switch housing screw. Tighten all three screws securely.

⚠ WARNING

FAN FALL HAZARD
Make sure screws are tight to secure the light fixture.

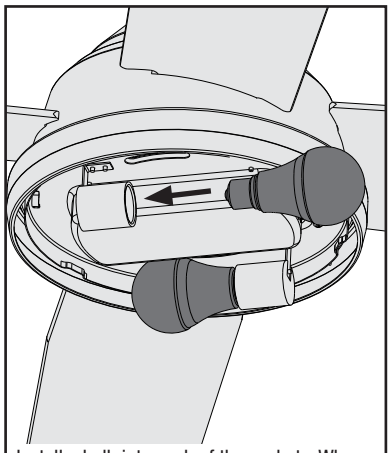

Install a bulb into each of the sockets. When necessary, replace with bulbs of the same type and wattage.

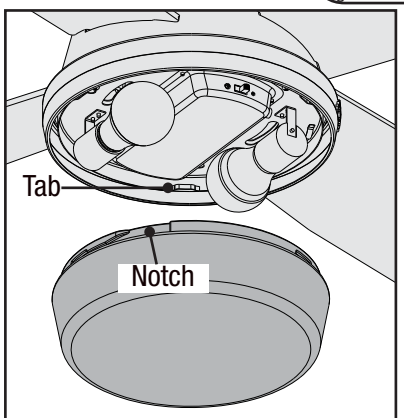

Lift the globe and align the notches in the globe with the tabs in the light kit. Attach the glass bowl to the light kit by twisting it clockwise until it snaps into place.

⚠ WARNING

GLASS FALL HAZARD
To prevent **SERIOUS INJURY** or **DEATH**, make sure that glass is properly secured.

Preparing the Remote Control

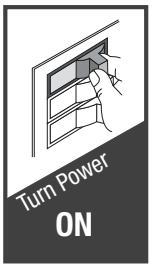

The remote control is already paired for use.

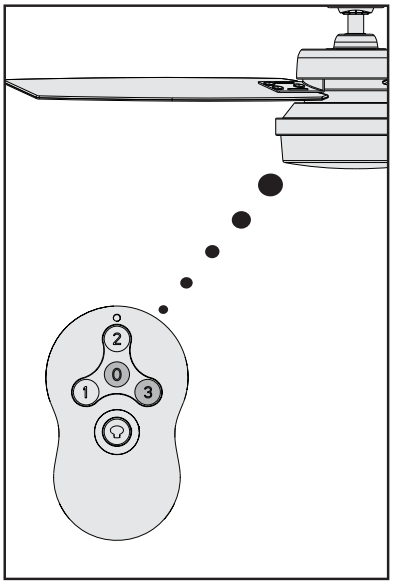

For your convenience, a remote function card is packed in with your remote.

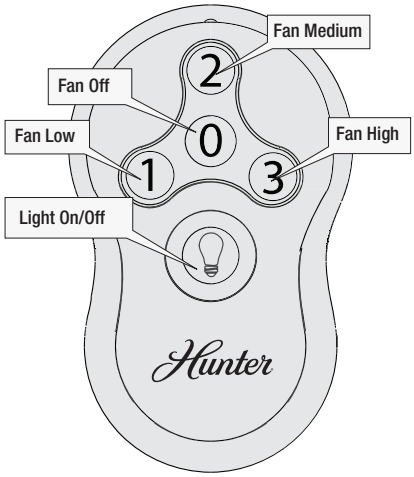

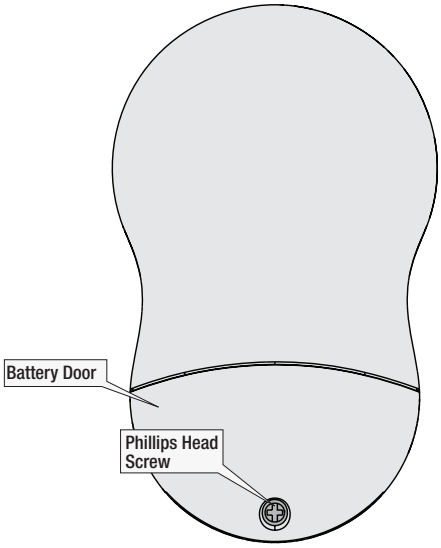

To access the battery compartment, remove the small Phillips head screw that secures the battery door to the transmitter assembly. The battery should be installed with the positive (+) side up. Replace with a CR2032 battery when necessary.

The remote transmitter should already be paired to the receiver and ready to use.

Note: If your need to pair your remote, turn fan power off and back on at the wall switch. Within 3 minutes, press and hold both the Fan Off button and the High button for 4 seconds to pair the remote. **To prevent faulty operation, please ensure all other ceiling fans within range are turned off at the wall switch while pairing.**

To turn on fan, press a fan speed button. Speeds range from off (0) to high (3). Quickly press the Light button to turn the lights off and on.

Using the Remote Control Cradle

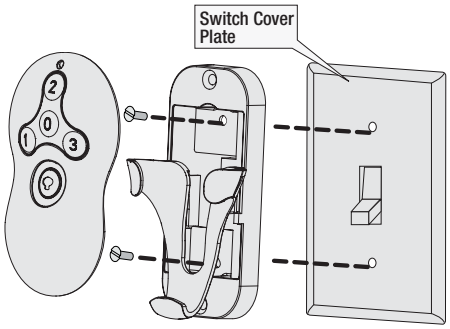

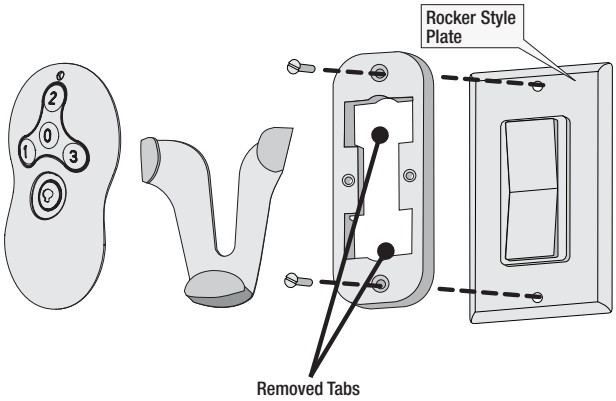

To install the transmitter cradle, remove the two screws holding the switch cover plate. Do not remove the cover plate. Orient the cradle by lining up the two mounting holes with those on the cover plate. Insert and tighten the screws. Do not over tighten.

Note: For rocker-style cover plates, break off the tabs by pushing outward.

Reversing the Fan

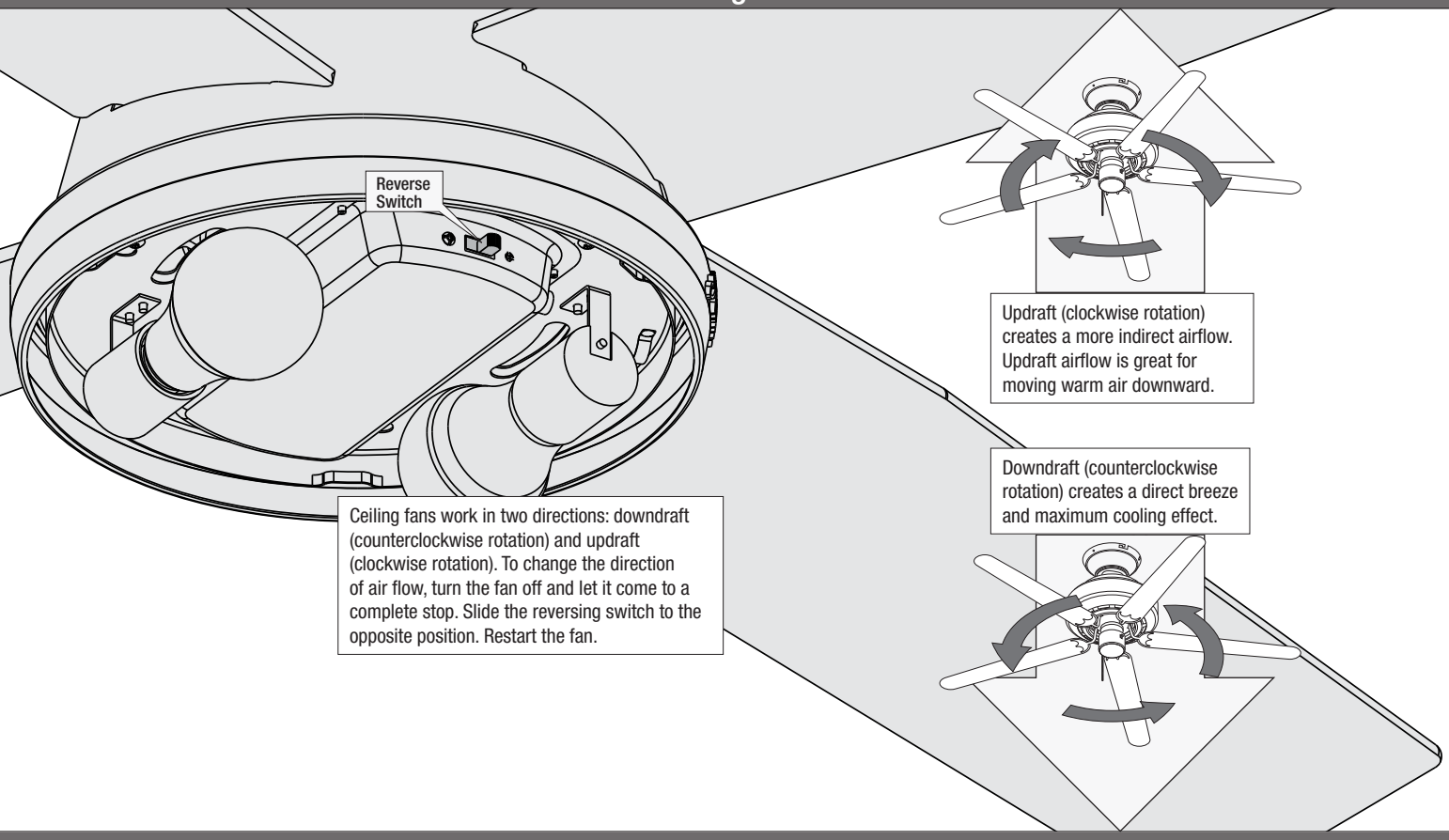

Limited Lifetime Warranty

Hunter Fan Company grants this limited warranty to the original purchaser of this Hunter ceiling fan. This document can be found at www.HunterFan.com.
Thank you for choosing Hunter!

How Can Warranty Service Be Obtained?

Proof of purchase is required when requesting warranty service. The original purchaser must present a sales receipt or other document that establishes proof of purchase. Hunter, at its sole discretion, may accept a gift receipt. To obtain service, contact Hunter Fan Company online or by phone.

www.HunterFan.com/Support/Contact-Us/
1-888-830-1326

Please do not ship your fan or any fan parts to Hunter. Delivery will be refused.

What Does This Warranty Cover?

Motor — Limited Lifetime Warranty
If any part of your ceiling fan motor fails during your ownership of the fan due to a defect in material or workmanship, as determined solely by Hunter, Hunter will provide you with a replacement fan free of charge.* The foregoing limited warranty applies only to the motor itself and does not apply to electronic controls – such as remote control transmitters, remote control receivers, or capacitors – used in conjunction with the motor. Such electronic control items are included in the one-year limited warranty below.

Other — One-Year Limited Warranty
Except as otherwise indicated throughout this warranty, if any part of your Hunter ceiling fan fails at any time within one year of the date of purchase due to a defect in material or workmanship, as determined solely by Hunter, Hunter will provide a replacement part free of charge.*

Light Kits — Warranty May Vary
Light kits are included in the one-year limited warranty. However, you may qualify for additional warranty coverage if your fan includes one of the following:

- **LED Light Kits — Three-Year Limited Warranty**
  If your LED light kit module (not including glass components) or LED bulb fails at any time within three years of the date of purchase due to a defect in material or workmanship, as determined solely by Hunter, Hunter will provide a replacement part free of charge.*

** If no replacement product/part can be provided for your fan, we will provide a comparable or superior replacement product/part at the sole discretion of Hunter.*

What Does This Warranty NOT Cover?

Labor Excluded. This warranty does not cover any costs or fees associated with the labor (including electrician's fees) required to install, remove, or replace a fan or any fan parts. There is no warranty for light bulbs (except where otherwise noted); remote control batteries; fans purchased or installed outside the United States; fans owned by someone other than the original purchaser; fans for which proof of purchase has not been established; fans purchased from an unauthorized dealer; ordinary wear and tear; minor cosmetic blemishes; refurbished fans; and fans that are damaged due to any of the following: improper installation, misuse, abuse, improper care, failure to follow Hunter instructions, accidental damage caused by the fan owner or related parties, modifications to the fan, improper or incorrectly performed maintenance or repair, improper voltage supply or power surge, use of improper parts or accessories, failure to provide maintenance to the fan, or acts of God (e.g. flood).
ORIGINAL PURCHASER'S SOLE AND EXCLUSIVE REMEDY FOR A CLAIM OF ANY KIND WITH RESPECT TO THIS PRODUCT SHALL BE THE REMEDIES SET FORTH HEREIN. HUNTER FAN COMPANY IS NOT RESPONSIBLE FOR CONSEQUENTIAL OR INCIDENTAL DAMAGES, DUE TO PRODUCT FAILURE, WHETHER ARISING OUT OF BREACH OF WARRANTY, BREACH OF CONTRACT, OR OTHERWISE. Some States do not allow the exclusion or limitation of incidental or consequential damages, so the above limitation or exclusion may not apply to you.
ANY IMPLIED WARRANTIES OF MERCHANTABILITY OR FITNESS FOR A PARTICULAR PURPOSE APPLICABLE TO THIS PRODUCT ARE LIMITED IN DURATION TO THE PERIOD OF COVERAGE OF THE APPLICABLE LIMITED WARRANTIES SET FORTH ABOVE. Some States do not allow limitations on how long an implied warranty lasts, so the above limitation may not apply to you.

How Does State Law Affect Warranty Coverage?

This warranty gives you specific legal rights. You may also have other rights which vary from state to state.

Troubleshooting

Fan Doesn't Work

- Make sure power switch is on.
- Check the circuit breaker to ensure the power is turned on.
- Make sure the blades spin freely.
- Turn off power from the circuit breaker, then loosen the canopy and check all the connections according to the wiring diagram.

Excessive Wobbling

- Make sure the blades are properly installed on the blade iron posts.
- Turn the power off, support the fan carefully, and check that the hanger ball is properly seated.
- Use the provided balancing kit and instructions to balance the fan.

Noisy Operation

- Make sure the blades are properly installed.
- Check to see if any of the blades are cracked. If so, replace all of the blades.

Remote Control of Fan is Erratic

- Make sure the battery is installed correctly.
- Install a fresh battery.

Multiple Remote Issues

- If you have multiple remotes or multiple remote-controlled fans installed on the same circuit breaker and you are experiencing interference or faulty operation of your remote controls, please go to www.HunterFan.com/FAQs and click "How do I properly install multiple remote-controlled fans?" for information on how to correct this issue.

Hunter Pro Tip:

Cleaning the Fan
Use soft brushes or cloths to prevent scratching. Cleaning products may damage the finishes.