canplas PLUMBING

Submittal Sheet

Part Description:

6" PVC WHITE DWV 1/8 or 45 Degree Bend or Elbow, H X H

Part Number:

192506

Approvals and Listings maintained by:
Canplas Industries Ltd
Canada: 1-800-461-5300 USA: 1-888-461-5307

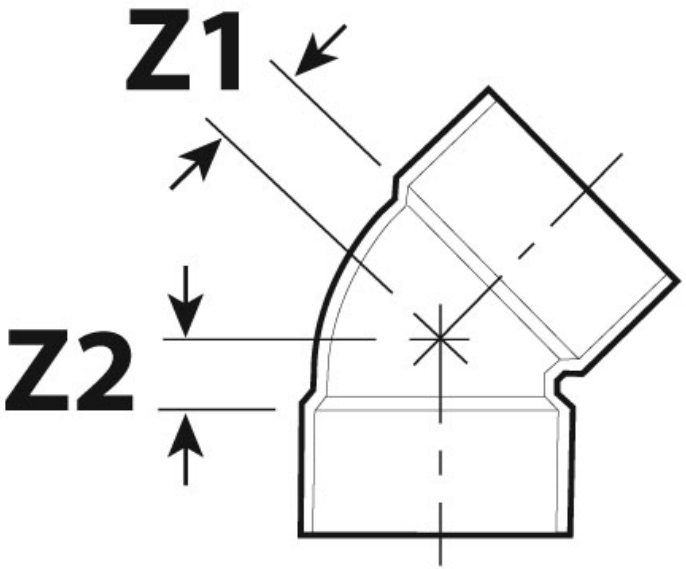

Part #	Part UPC	Colour	Size (inches)	Ctn Qty	Ctn Bar Code	Ctn. Wt (Kgs)	Ctn. Wt (lbs)	Skid Cubic (m)	Skid Cubic (ft)	Ctns/Skid
192506	662671190864	WHITE	6X6	8	10662671190861	13.64	30.01	1.90	67.04	18

Dimensions (inches)

Z1	Z2
1.84	2.14