canplas PLUMBING

# Submittal Sheet

Part Description:

## 2" PVC WHITE DWV Sanitary Tee H X H X H

Part Number:

## 192152L

Approvals and Listings maintained by:
Canplas Industries Ltd
Canada: 1-800-461-5300 USA: 1-888-461-5307

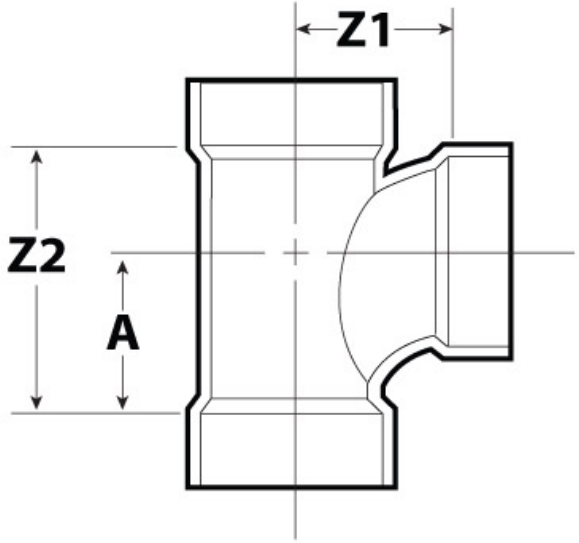


| Part # | Part UPC | Colour | Size (inches) | Ctn Qty | Ctn Bar Code | Ctn. Wt (Kgs) | Ctn. Wt (lbs) | Skid Cubic (m) | Skid Cubic (ft) | Ctns/Skid |
|---|---|---|---|---|---|---|---|---|---|---|
| 192152L | 662671190062 | WHITE | 2X2X2 | 40 | 10662671190069 | 9.40 | 20.68 | 1.86 | 65.82 | 32 |

## Dimensions (inches)

| A | Z1 | Z2 |
|---|---|---|
| 2.24 | 2.26 | 3.63 |