canplas PLUMBING

Submittal Sheet

Part Description:

2" ABS DWV Long Sweep Bend or Elbow H X H

Part Number:

102277

Approvals and Listings maintained by:
Canplas Industries Ltd
Canada: 1-800-461-5300 USA: 1-888-461-5307

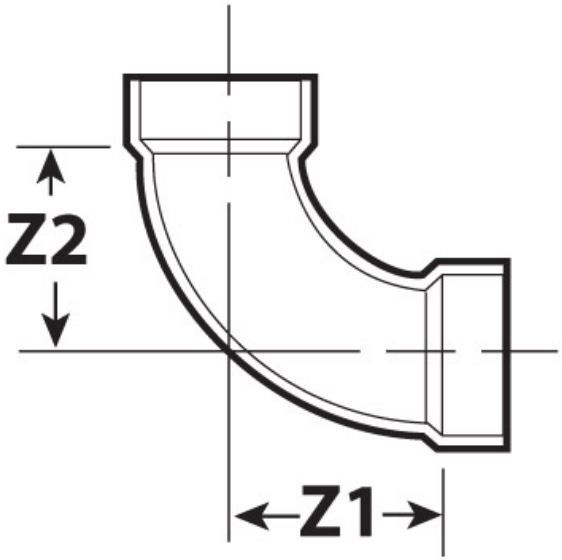

Part #	Part UPC	Colour	Size (inches)	Ctn Qty	Ctn Bar Code	Ctn. Wt (Kgs)	Ctn. Wt (lbs)	Skid Cubic (m)	Skid Cubic (ft)	Ctns/Skid
102277	662671100566	BLACK	2X2	25	10662671100563	3.73	8.21	1.48	52.35	48

Dimensions (inches)

Z1	Z2
3.19	3.19