PIPE TOOLS & VISES
SINCE 1896

DEB4 Deburring Tool

Replacement Parts

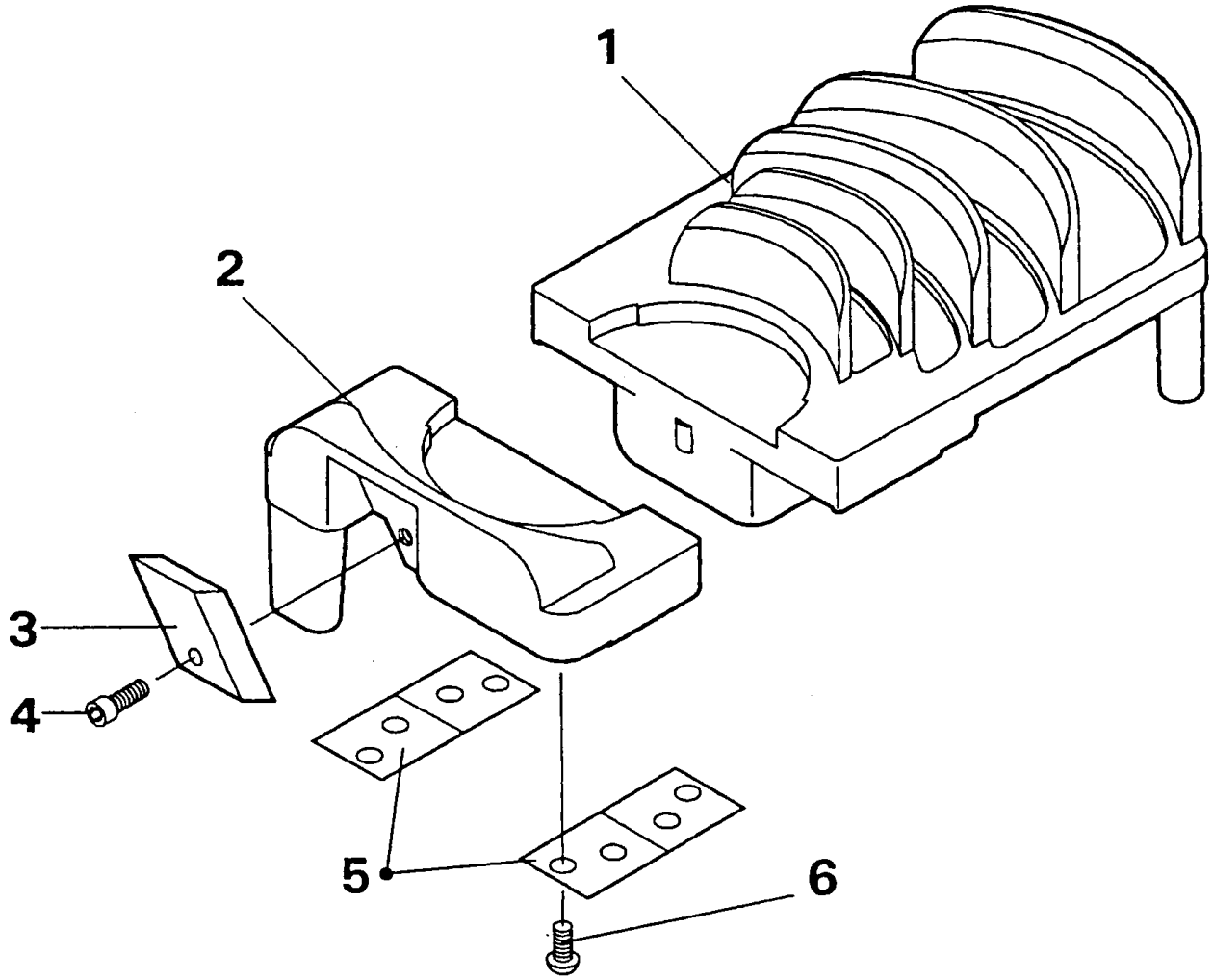

Parts List

Ref. No.	Description	Item Code	Qty.
1	BODY	94089	1
2	CUTTING HEAD	94090	1
3	BLADE	94430	1
4	CAP SCREW FOR BLADE	30105	1
5	SPRING	40188	2
6	MACHINE SCREWS	30106	8

Reed Manufacturing Company
1425 West 8th Street
Erie, PA 16502 USA

QUALITY & Service that Last a Lifetime

Phone: 800-666-3691 or 814-452-3691
Fax: 800-456-1697 or 814-455-1697
www.reedmfgco.com