Rn3 Inline Radon Fan

Item Number: 89053
Variant: 120V 1~ 60Hz

- Use for **Medium Suction, Medium Airflow** applications
- UV resistant, UL Listed durable plastic
- UL Listed for use in commercial applications
- Watertight electrical terminal box
- Totally enclosed for protection
- Automatic reset thermal overload protection
- Zero leakage

Active radon mitigation systems employ specialized fans to exhaust radioactive radon gas from underneath building structures via a sealed pipe system. These systems are designed to remove radon gas before it migrates into the building envelope.

The **Rn3** models is an excellent choice for systems with elevated radon levels, poor communication, multiple suction points and/or large sub slab footprint. High air flow, medium suction.

The fan features a fully sealed plastic housing. The inlet and outlet pieces of the housing are joined via a vibration welding process. The process uses transverse, reciprocating motion under pressure at the point of contact. The friction produces heat that melts the thermoplastic material at the interface. The melted material quickly re-solidifies, resulting in a fused, single piece housing. The fused seam is inherently air tight, very strong and permanent. This air-tight product ensures that efficiency is not lost and contaminants are not spilled due to leakage.

A large electrical wiring enclosure is designed into the fan housing, making electrical installation easier. Thermal overload protected with automatic reset. The fan can be mounted both indoor, outdoor and in wet locations.

Performance certified by **HVI**; safety certified by **UL**.

To simplify installation, use **FRIK 6x3** or **FRIK 6x4** Installation kits.

Technical parameters

Norminal data		
Voltage (Nominal)	120	V
Frequency	60	Hz
Phase(s)	1~	
Input power	141	W
Input current	1.2	A
Impeller speed	2,782	r.p.m.
Air flow	max 377.0	cfm
Temperature of transported air	max 140	°F

Protection/Classification		
Enclosure class, motor	IP44	
Insulation class	B	

Dimensions and weights		
Duct dimension; Circular, inlet	6	in.
Duct dimension; Circular, outlet	6	in.
Weight	6.3	lb

Optional		
Duct connection type	Circular	

Performance curve

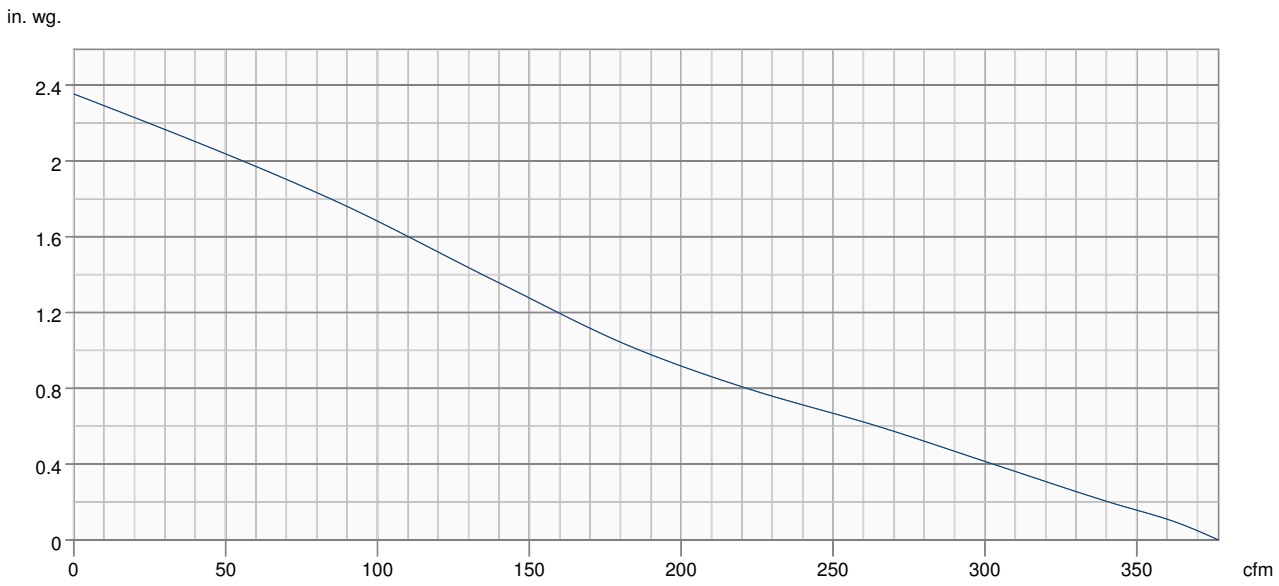

Hydraulic data	
Required air flow	-
Required static pressure	-
Working air flow	-
Working static pressure	-
Air density	0.075 lb/ft³
Power	-
Fan control - RPM	-
Current	-
SFP	-
Control voltage	-
Supply voltage	-

Dimensions

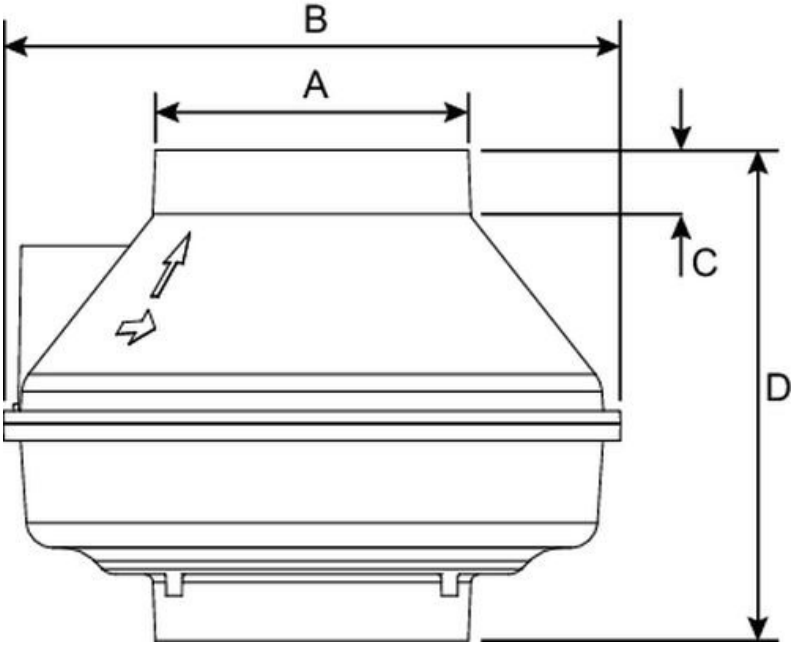

Model	A	B	C	D
Rn1	4 15/32 (114)	10 (254)	1 1/4 (32)	9 1/4 (235)
Rn2	4 15/32 (114)	10 (254)	1 1/4 (32)	9 1/4 (235)
Rn3	5 7/8 (149)	11 1/2 (292)	1 1/4 (32)	9 1/4 (235)

Dimensions in inches (mm).

Wiring

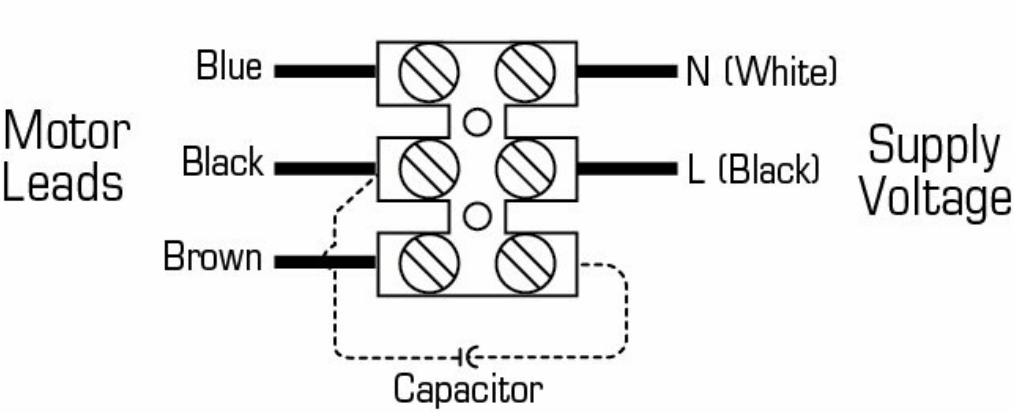
Motor Leads
Blue
Black
Brown
N (White)
L (Black)
Supply Voltage
Capacitor

Accessories

- FRIK 6x3 Rn Installation Kit (95906)
- FRIK 6x4 Rn Installation Kit (95907)
- LDVI® 6x3 Bulk Pack, 40 pcs (95910)
- LDVI® 6x4 Bulk Pack, 40 pcs (95911)

Documents

- Rn Series Brochure.pdf
- Rn3_Sales_Sheet.pdf
- 484840 Rn OIPM EN FR .pdf