canplas PLUMBING

Submittal Sheet

Part Description:

2" ABS DWV 45 Degree or 1/8 Long Turn Street Bend or Elbow Spigot X H

Part Number:

102402

Approvals and Listings maintained by:
Canplas Industries Ltd
Canada: 1-800-461-5300 USA: 1-888-461-5307

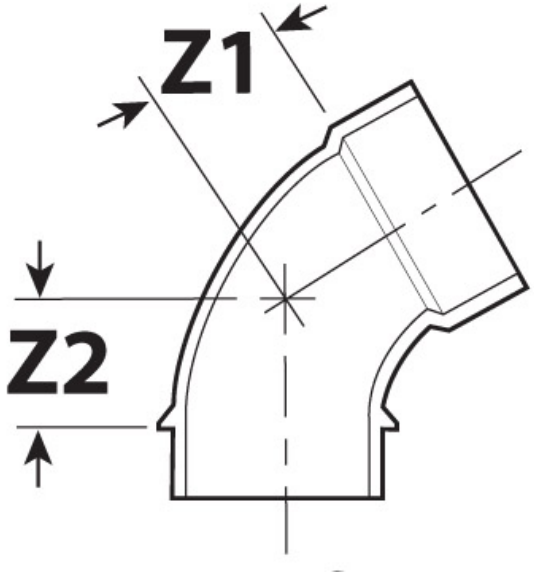

Part #	Part UPC	Colour	Size (inches)	Ctn Qty	Ctn Bar Code	Ctn. Wt (Kgs)	Ctn. Wt (lbs)	Skid Cubic (m)	Skid Cubic (ft)	Ctns/Skid
102402	662671100924	BLACK	2X2	50	10662671100921	4.80	10.56	1.65	58.33	36

Dimensions (inches)

Z1	Z2
1.44	1.44