canplas PLUMBING

Submittal Sheet

Part Description:

4" ABS DWV 1/8 or 45 Degree Long Turn Bend or Elbow, H X H

Part Number:

102504

Approvals and Listings maintained by:
Canplas Industries Ltd
Canada: 1-800-461-5300 USA: 1-888-461-5307

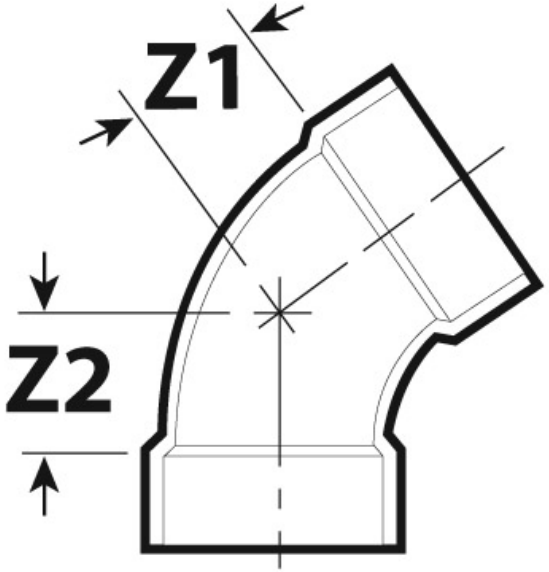

Part #	Part UPC	Colour	Size (inches)	Ctn Qty	Ctn Bar Code	Ctn. Wt (Kgs)	Ctn. Wt (lbs)	Skid Cubic (m)	Skid Cubic (ft)	Ctns/Skid
102504	662671101143	BLACK	4X4	10	10662671101140	5.95	13.09	1.86	65.82	32

Dimensions (inches)

Z1	Z2
2.19	2.15