Catalog Numbers, Features and Ratings

- 1 PHASE, 3 WIRE, 120/240V ~
- 100K AIC MAX. RATED (SEE WIRING DIAGRAM FOR DETAILS)
- MAIN LUG ONLY
- INVERTIBLE
- TYPE N1 INDOOR ENCLOSURE
- ANSI 61 GRAY POWDER COATED ENCLOSURE (SEE CHART FOR TRIM/DOOR COLOR)
- DESIGNED FOR USE WITH PLUG-ON NEUTRAL BREAKERS

Catalog Number	ENCLOSURE DIMS (Inside) L	W	D	Amps Max	Number Spaces	Number Circuits	Bus Bar Material	Bus Bar Plating	Trim Color
SN2040L1150	24.00	14.25	3.88	150	20	40	Aluminum	Tin Plated	Gray
SN2040L1150W	24.00	14.25	3.88	150	20	40	Aluminum	Tin Plated	White

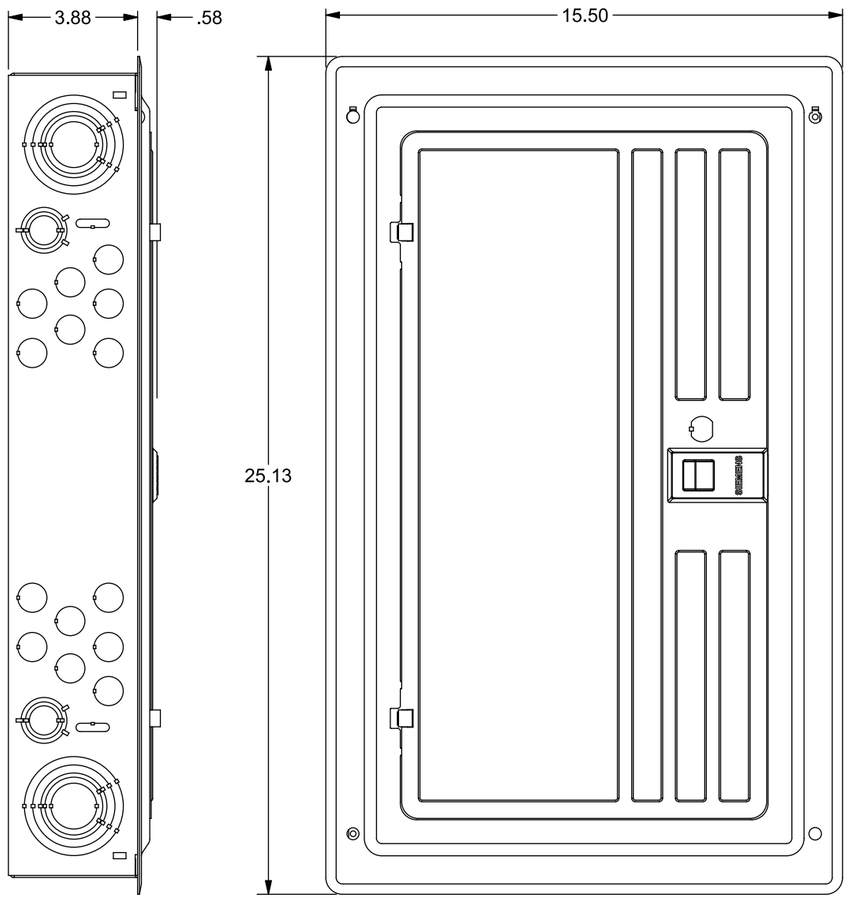

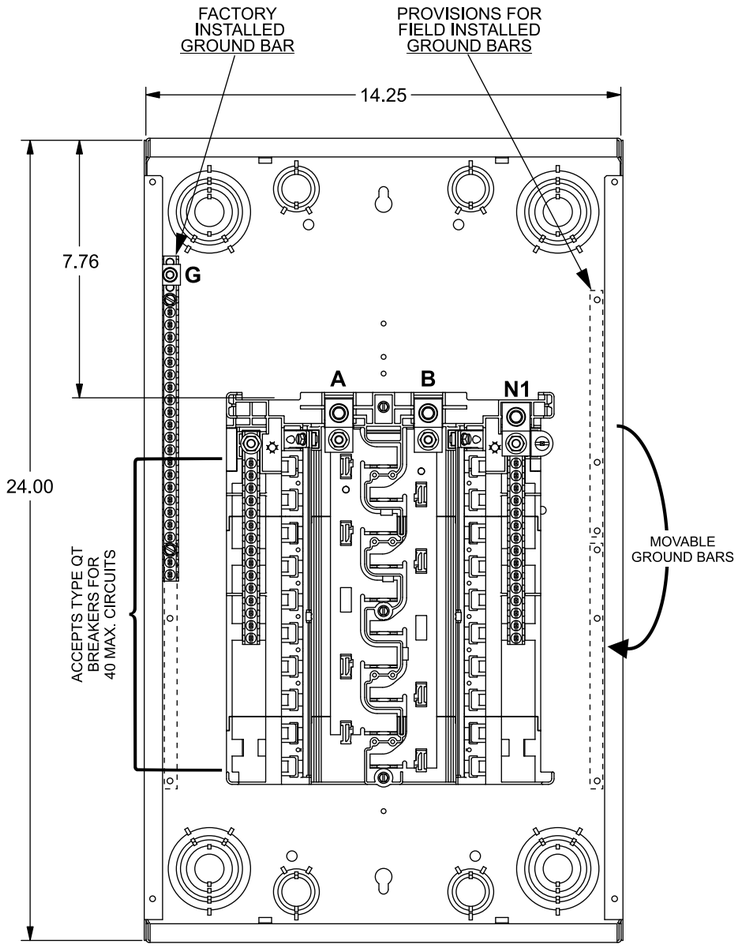

VIEW SHOWN WITH TRIM ASSEMBLY REMOVED

Trim/Door Detail

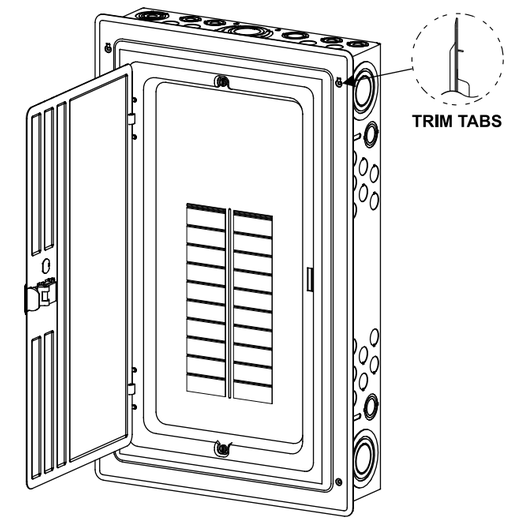

KO Diagram

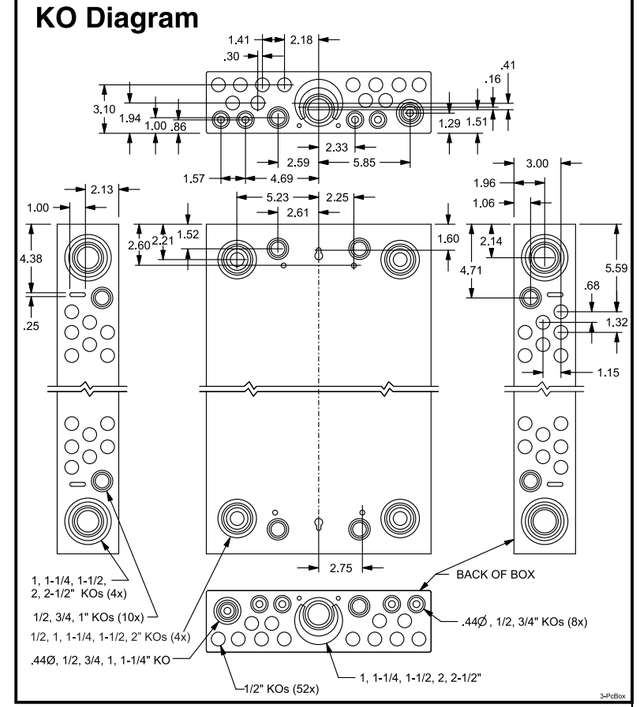

TERMINAL WIRE SIZES AND TORQUES

USE COPPER OR ALUMINUM 60°/75°C WIRE

SEE BREAKER MARKINGS FOR WIRE SIZE AND TORQUE REQUIREMENTS

TERMINALS		WIRE	TORQUE
A, B, N1		300 kcmil - 4 AWG	250 LB-INS
G		2/0 - 4 AWG	110 LB-INS
NEUTRAL/GROUND BARS (USE TYPE EC2GB or EC3GB GND BAR KIT ACCESSORY)		10-14 CU/10-12 AL 8 AWG 6-4 AWG	20 LB-INS 25 LB-INS 35 LB-INS
GROUND CONDUCTORS ONLY		(2)or(3) 14 AWG (2) 12-10 AWG	20 LB-INS 20 LB-INS
N2	ECLK2N NEUTRAL LUG	2/0 - 4 AWG	110 LB-INS
	ECLK3N NEUTRAL LUG	300 kcmil - 4 AWG	250 LB-INS
ECLK1-2 NEUTRAL LUG KIT ECLK2 NEUTRAL LUG KIT ECLK3 NEUTRAL LUG KIT		2/0 - 4 AWG 2/0 - 4 AWG 300 kcmil - 1 AWG	45 LB-INS 135 LB-INS 340 LB-INS
MAIN LUG TO BUS CONNECTION (1/4-20 NUT)			45 LB-INS
BONDING SCREW			45 LB-INS

ACCESSORIES

REFER TO WIRING DIAGRAM FOR CORRECT ACCESSORY USAGE

ACCESSORIES DESCRIPTION	CAT. NO.
DOOR LOCK	ECQFL2
FILLER PLATE, 1"	QF3
QP HOLD-DOWN/BARRIER	ECMBR2
QNR LINE TERMINAL BARRIER	ECLTB3
SUBFEED LUG KIT	ECLK2125 ECLK2225
150-225 AMP MAIN LUG	ECMLK225
STANDBY PWR INTERLOCK KITS: ECSBPK01, ECSBPK02, ECSBPK05, ECSBPK07	
SURF. MOUNT SPACER KIT	ECSMK1
ARC FLASH LABEL	ECAFL

GROUND BAR KITS DESCRIPTION	CAT. NO.
TYPE EC2GB KIT, 12 SCREWS	EC2GB12
TYPE EC2GB KIT, 12 SCREWS, 2/0 LUG	EC2GB122
TYPE EC2GB KIT, 15 SCREWS	EC2GB15
TYPE EC2GB KIT, 15 SCREWS, 2/0 LUG	EC2GB152
TYPE EC3GB KIT, 21 SCREWS	EC3GB21
TYPE EC3GB KIT, 21 SCREWS, 2/0 LUG	EC3GB212
TYPE EC3GB KIT, 27 SCREWS	EC3GB27
TYPE EC3GB KIT, 27 SCREWS, 2/0 LUG	EC3GB272
TYPE EC3GB KIT, 30 SCREWS	EC3GB30
TYPE EC3GB KIT, 30 SCREWS, 2/0 LUG	EC3GB302
TYPE EC3GB KIT, 35 SCREWS, 2/0 LUG	EC3GB352

© 2020 Copyright Siemens Industry, Inc.

SIEMENS
Siemens Industry, Inc.

Load Center

Description: **SN Series, 1 Phase, Indoor, 150A, 20 Pos, 40 Ckt, Main Lug**

KAM 3/16/20 | DO NOT SCALE DRAWING | Dwg No: **SN2040L1150-W**