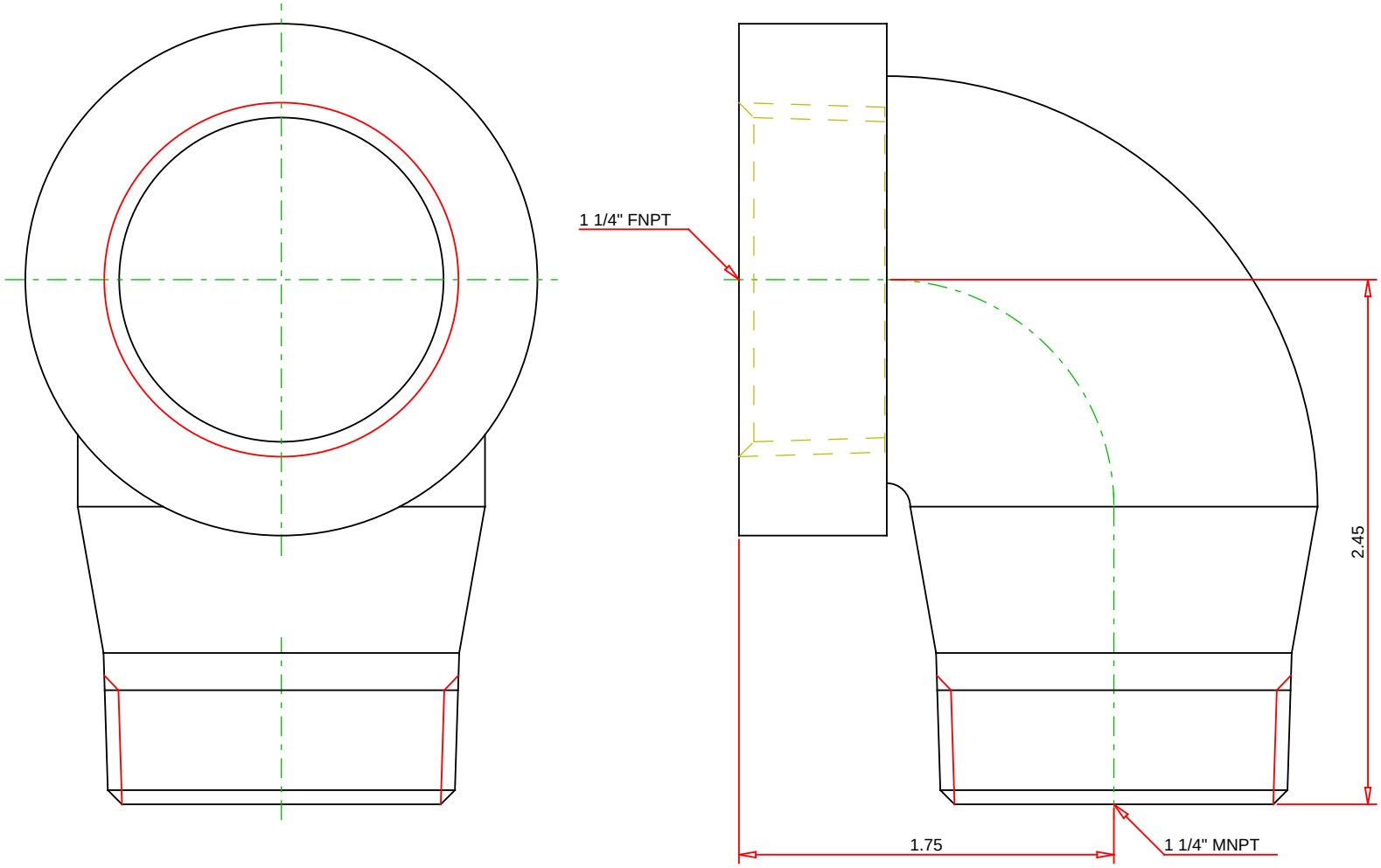

Note :
- Drawing is not to Scale.
- Dimensions are subject to change.
- All dimensions are in Inches and are for Reference Only.

Part Name:
1 1/4-3103-Galvanized

Product No:
0811016807

Description:
3103 11/4 GALV IMI 90 STREET ELL

ASC Engineered Solutions

Email: marketing@asc-es.com

Website: https://www.asc-es.com/

Date: 8-SEP-2022