canplas PLUMBING

Submittal Sheet

Part Description:

4"X 4" X 2" PVC WHITE DWV Single Long Turn Tee Wye H X H X H

Part Number:

194337

Approvals and Listings maintained by:
Canplas Industries Ltd
Canada: 1-800-461-5300 USA: 1-888-461-5307

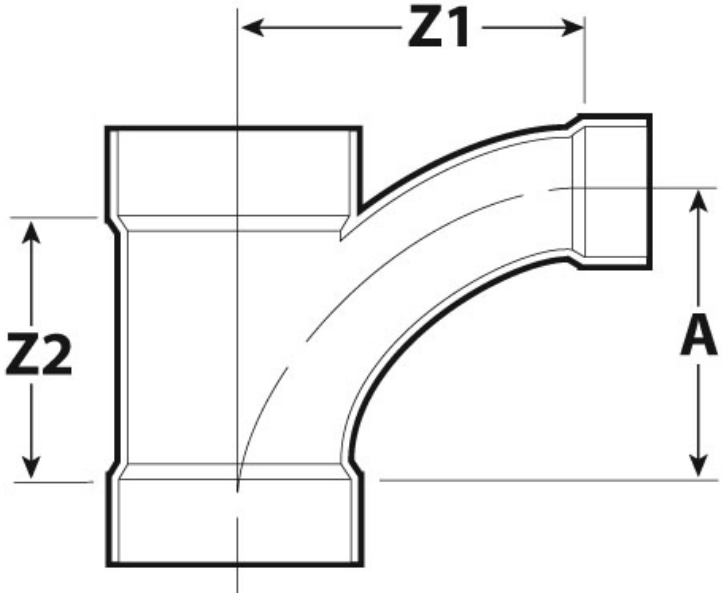

Part #	Part UPC	Colour	Size (inches)	Ctn Qty	Ctn Bar Code	Ctn. Wt (Kgs)	Ctn. Wt (lbs)	Skid Cubic (m)	Skid Cubic (ft)	Ctns/Skid
194337	662671192547	WHITE	4X4X2	15	10662671192544	13.93	30.65	1.90	67.04	18

Dimensions (inches)

A	Z1	Z2
5.11	6.08	4.42