# Commercial Light Duty Electric

## Water Heaters

# PATRIOT™

Designed for use as a recovery heater having its own storage tank. Available in upright, standard, and lowboy models.

### GLASSLINED TANK

- Thirteen sizes; 6 thru 119 gallon capacity. Tank interior is coated with glass specially designed by State Water Heaters for water heater use.

### ELEMENTS

- Zinc plated copper sheaths for longer life. Medium watt density means lower surface temperature to minimize scale build-up and more surface to heat water. Element sizes from 1.5 to 6 KW. Maximum input 12 KW (see chart).

### STANDARD VOLTAGES

- 120, 277 single phase and 208, 240 and 480V unbalanced three-phase delta; easily converted to single-phase at terminal block (except 208V with 5500 watt elements). Single element heaters, single-phase only.

### TERMINAL BLOCK

- Factory-installed. Just bring the service to heater and connect to block. Terminal block not supplied on 120V & 277 volt models. (No junction box on PCE 6-20)

### CONTROLS

- Temperature control (adjustable through arange of 130° to 170°F on single element and 120° to 181°F on dual element) and manual reset high temperature cutoff per element (dual element models). Factory-wired for non-simultaneous operation; easily converted to simultaneous element operation (three phase models only).

### CSA CERTIFIED AND ASME RATED T&P RELIEF VALVE

### SIMPLIFIED CIRCUITRY, COLOR CODED FOR EASE OF SERVICE

### ANODE ROD FOR MAXIMUM CORROSION PROTECTION

### CABINET HAS BONDERIZED UNDERCOAT WITH BAKED ENAMEL FINISH

### TOP INLET AND OUTLET OPENINGS

### DRAIN VALVE (EXCLUDES PCE 6-20)

### UL APPROVED FIELD CONVERSION PROGRAM

### COMPLIANCE

- Meets the standby loss Requirements of the U.S. Department of Energy and current edition of ASHRAE/IESNA 90.1.

### LIMITED WARRANTY OUTLINE

- If the tank should leak any time during the first three years, under the terms of the warranty, State Water Heaters will furnish a replacement heater; installation, labor, handling and local delivery extra. THIS OUTLINE IS NOT A WARRANTY. For complete information consult the written warranty or State Water Heaters.

Low Lead Content

SOLID. STATE.

© April 2019 State Water Heaters. All Rights Reserved

## Recovery Capacities

| Element Wattage (Upper/ Lower) | Input | U.S. Gallons/Hr and Liters/Hr. at Temperature Rise Indicated | | | | | | | | | | | |
|---|---|---|---|---|---|---|---|---|---|---|---|---|---|
| | | F° | 36 | 40 | 54 | 60 | 72 | 80 | 90 | 100 | 108 | 120 | 126 |
| | kW | C° | 20 | 22.2 | 30 | 33.3 | 40 | 44.4 | 50 | 55.5 | 60 | 66.6 | 70 |
| **Non-Simultaneous Operation** | | | | | | | | | | | | | |
| **/1500** | 1.5 | GPH | 17 | 15 | 11 | 10 | 8 | 8 | 7 | 6 | 6 | 5 | 5 |
| | | LPH | 64 | 58 | 43 | 38 | 32 | 29 | 26 | 23 | 21 | 19 | 18 |
| **/2000** | 2 | GPH | 23 | 20 | 15 | 14 | 11 | 10 | 9 | 8 | 8 | 7 | 6 |
| | | LPH | 85 | 77 | 57 | 51 | 43 | 38 | 34 | 31 | 28 | 26 | 24 |
| **/2500** | 2.5 | GPH | 28 | 25 | 19 | 17 | 14 | 13 | 11 | 10 | 9 | 8 | 8 |
| | | LPH | 107 | 96 | 71 | 64 | 53 | 48 | 43 | 38 | 36 | 32 | 30 |
| **3000/3000** | 3.0 | GPH | 34 | 30 | 23 | 20 | 17 | 15 | 14 | 12 | 11 | 10 | 10 |
| | | LPH | 128 | 115 | 85 | 77 | 64 | 58 | 51 | 46 | 43 | 38 | 37 |
| **4000/4000** | 4.0 | GPH | 45 | 41 | 30 | 27 | 23 | 20 | 18 | 16 | 15 | 14 | 13 |
| | | LPH | 170 | 153 | 114 | 102 | 85 | 77 | 68 | 61 | 57 | 51 | 49 |
| **4500/4500** | 4.5 | GPH | 51 | 46 | 34 | 30 | 25 | 23 | 20 | 18 | 17 | 15 | 14 |
| | | LPH | 192 | 173 | 128 | 115 | 96 | 86 | 77 | 69 | 64 | 58 | 55 |
| **5000/5000** | 5.0 | GPH | 56 | 51 | 38 | 34 | 28 | 25 | 23 | 20 | 19 | 17 | 16 |
| | | LPH | 213 | 192 | 142 | 128 | 107 | 96 | 85 | 77 | 71 | 64 | 61 |
| **6000/6000** | 6.0 | GPH | 68 | 61 | 45 | 41 | 34 | 30 | 27 | 24 | 23 | 20 | 19 |
| | | LPH | 256 | 230 | 170 | 153 | 128 | 115 | 102 | 92 | 85 | 77 | 73 |
| **Simultaneous Operation** | | | | | | | | | | | | | |
| **3000/3000** | 6.0 | GPH | 68 | 61 | 45 | 41 | 34 | 30 | 27 | 24 | 23 | 20 | 19 |
| | | LPH | 256 | 230 | 170 | 153 | 128 | 115 | 102 | 92 | 85 | 77 | 73 |
| **4000/4000** | 8.0 | GPH | 90 | 81 | 60 | 54 | 45 | 41 | 36 | 32 | 30 | 27 | 26 |
| | | LPH | 341 | 307 | 227 | 205 | 170 | 153 | 136 | 123 | 114 | 102 | 97 |
| **4500/4500** | 9 | GPH | 101 | 91 | 68 | 61 | 51 | 46 | 41 | 36 | 34 | 30 | 29 |
| | | LPH | 384 | 345 | 256 | 230 | 192 | 173 | 153 | 138 | 128 | 115 | 110 |
| **5000/5000** | 10.0 | GPH | 113 | 101 | 75 | 68 | 56 | 51 | 45 | 41 | 38 | 34 | 32 |
| | | LPH | 426 | 384 | 284 | 256 | 213 | 192 | 170 | 153 | 142 | 128 | 122 |
| **6000/6000** | 12.0 | GPH | 135 | 122 | 90 | 81 | 68 | 61 | 54 | 49 | 45 | 41 | 39 |
| | | LPH | 511 | 460 | 341 | 307 | 256 | 230 | 205 | 184 | 170 | 153 | 146 |

Recovery capacities at 100° F rise equal: for non-simultaneous element operation = 4.1 gal. x kW of one element; for simultaneous element operation = 4.1 gal. x 2/3 kW of both elements. For other rises multiply element kW as previously explained by 414 and divide by temperature rise. Full load current for single phase = total watts :- voltage.

## Tank Capacities, Dimensions and Weights

| Model Number | No. of Elements | Tank Capacity | | A | | B | | C | | D | | Approx. Shipping Weight | |
|---|---|---|---|---|---|---|---|---|---|---|---|---|---|
| | | U.S. Gals. | Liters | Inches | mm | Inches | mm | Inches | mm | Inches | mm | lbs. | kG. |
| **PCE 6 10MSA** | 1 | 6 | 23 | 15-1/2 | 394 | 14-1/4 | 362 | 11 | 279 | N/A | N/A | 35 | 15.9 |
| **PCE 10 10MSA** | 1 | 10 | 38 | 18-1/4 | 464 | 18 | 457 | 12-1/2 | 318 | N/A | N/A | 54 | 24.5 |
| **PCE 17 0MSA** | 1 | 15 | 57 | 26 | 660 | 18 | 457 | 20-1/2 | 521 | N/A | N/A | 58 | 26.3 |
| **PCE 20 10MSA** | 1 | 20 | 76 | 22-1/4 | 565 | 21-3/4 | 552 | 15-3/8 | 391 | N/A | N/A | 73 | 33.1 |
| **PCE 30 20LSA** | 2 | 30 | 114 | 30-7/8 | 784 | 21-3/4 | 552 | 24-1/8 | 613 | 8 | 203 | 100 | 45.4 |
| **PCE 40 20LSA** | 2 | 40 | 151 | 32-1/4 | 819 | 24 | 610 | 25-9/16 | 649 | 8 | 203 | 125 | 56.7 |
| **PCE 50 20LSA** | 2 | 50 | 189 | 32-1/4 | 819 | 26-1/2 | 673 | 25-1/8 | 638 | 8 | 203 | 166 | 75.3 |
| **PCE 30 20RTA** | 2 | 30 | 114 | 34-1/2 | 876 | 20-1/2 | 521 | N/A | N/A | 8 | 203 | 98 | 44.5 |
| **PCE 40 20RTA** | 2 | 40 | 151 | 45-1/8 | 1146 | 20-1/2 | 521 | N/A | N/A | 8 | 203 | 113 | 51.3 |
| **PCE 52 20RTA** | 2 | 50 | 189 | 54-7/8 | 1394 | 20-1/2 | 521 | N/A | N/A | 8 | 203 | 131 | 59.4 |
| **PCE 66 20RTA** | 2 | 66 | 250 | 60-3/4 | 1543 | 21-3/4 | 552 | N/A | N/A | 8 | 203 | 176 | 79.8 |
| **PCE 82 20RTA** | 2 | 80 | 303 | 59-3/8 | 1508 | 24 | 610 | N/A | N/A | 8 | 203 | 211 | 95.7 |
| **PCE 120 20RTA** | 2 | 119 | 450 | 62-7/16 | 1586 | 29-3/8 | 746 | N/A | N/A | 8 | 203 | 326 | 147.9 |

Dimensions and specifications subject to change without notice in accordance with our policy of continuous product improvement.

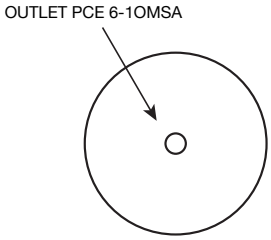


**TOP VIEW**
PCE 6 10MSA, PCE 10 10MSA
PCE 17 10MSA, PCE 20 10MSA

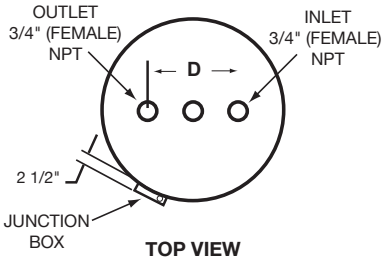


**TOP VIEW**
PCE 30 20LSA, PCE 40 20LSA,
PCE 50 20LSA

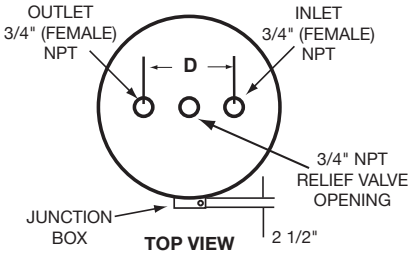


**TOP VIEW**

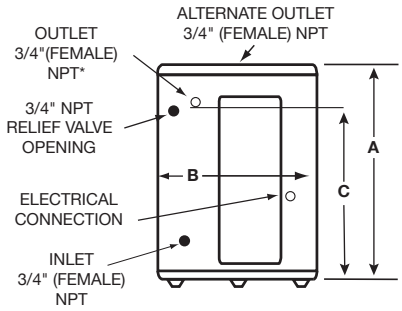


**FRONT VIEW**
PCE 6 10MSA, PCE 10 10MSA
PCE 17 10MSA, PCE 20 10MSA

No Side Outlet available for PCE 6 Model.

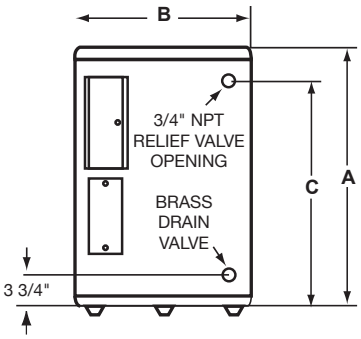


**FRONT VIEW**
PCE 30 20LSA, PCE 40 20LSA,
PCE 50 20LSA

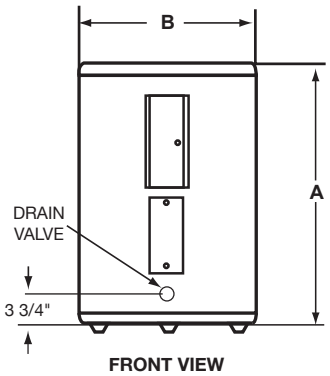


**FRONT VIEW**
PCE 30 20RTA – PCE 120 20RTA

## SPECIFICATION

The water heaters(s) shall be Patriot™ Model(s) No. _____ as manufactured by State Water Heaters or an approved equal. Heater(s) shall be rated at _____kW, _____volts, _____-phase, 60 cycle AC, and listed by Underwriters' Laboratories. Models shall meet the standby loss requirements of the U.S. Department of energy and current edition of ASHRAE/IESNA 90.1. Tank(s) shall be _____gallon capacity. Heater(s) shall have 150 psi working pressure and be equipped with extruded high density anode rod. All internal surfaces of the heater(s) exposed to water shall be glasslined with an alkaline borosilicate composition that has been fused-to-steel by firing at a temperature range of 1400°F to 1600°F. Electric heating elements shall be medium watt density with zinc plated copper sheath. Each element shall be controlled by an individually mounted thermostat and high temperature cutoff switch. The outer jacket shall be of backed enamel finish and shall enclose the tank with foam insulation. Electrical junction box with heavy duty terminal block shall be provided (except on 120V & 277V {no junction box on PCE 6 thru 20}). The drain valve shall be located in the front for ease of servicing. Heater tank shall have a three year limited warranty as outlined in the written warranty. Fully illustrated instruction manual to be included.

FOR MORE INFORMATION, CONTACT: STATE WATER HEATERS 500 TENNESSEE WALTZ PARKWAY, ASHLAND CITY, TN 37015 800-365-0024 TOLL-FREE USA STATEWATERHEATERS.COM

© April 2019 State Water Heaters. All Rights Reserved