MADE IN
THE U.S.A.

4400 SERIES
LOW PROFILE COMMERCIAL FAN FORCED WALL HEATER

Select Division

CUSTOMER		**DATE:**	
PROJECT			
LOCATION			
ARCHITECT			
ENGINEER			
CONTRACTOR			
SUBMITTED BY			
APPROVED BY			
APPROVED BY			

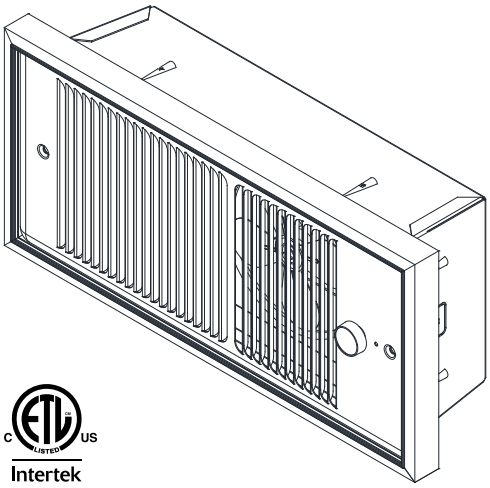

Intertek

SUBMITTAL DATA SHEET

QTY	MODEL	TAG	WATTAGE	VOLTS	PHASE	AMPS	DISCONNECT	THERMOSTAT

NOTES/SPECIAL INSTRUCTIONS:

PRINT FORM

EMAIL FORM

CLEAR FORM

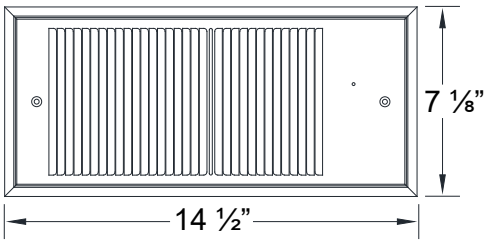

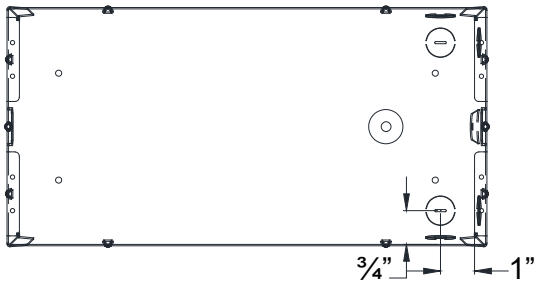

Rough In Dimensions
14 ½”W x 7 ⅛”H x 3 ½”D

Weight: 9lbs

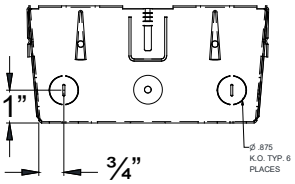

- Powder coated 20 gauge steel with extruded aluminum frame
- Manual reset thermal limit
- Finned tubular steel element
- Propellar style fan blade produces 70 CFM
- In-Built tamper proof thermostat
- Left, right, or top discharge
- Dual wattage and voltage units available for 208/240 volts
- Surface Mounting Frames available for non-recessed and semi-recessed applications

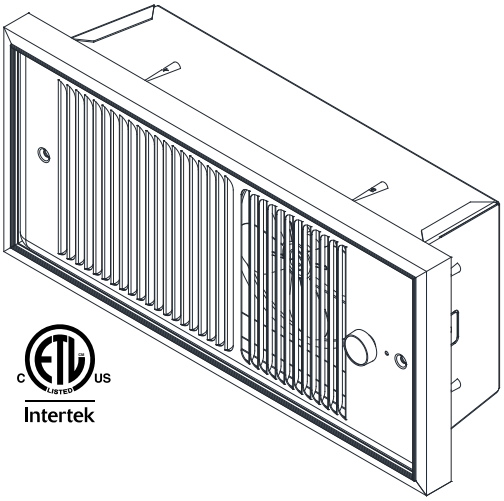

Standard Models

MFG CATALOG NUMBER	MFG MODEL NUMBER	VOLTS	WATTS	MAX BTUs	AMPS
DOUBLE POLE IN-BUILT THERMOSTAT (RANGE 0º - 110º F)					
03283202	F4420T2RP	208	2000	6826	9.6
03283302	HF4475T2RP	240/208	750 / 562	2560 / 1920	3.1 / 2.7
03283402	HF4410T2RP		1000 / 750	3413 / 2560	4.2 / 3.6
03283502	HF4415T2RP		1500 / 1125	5120 / 3840	6.3 / 5.4
03283602	HF4420T2RP		2000 / 1500	6826 / 5120	8.3 / 7.2
SINGLE POLE IN-BUILT THERMOSTAT (RANGE 0º - 110º F)					
03283702	E4475TRP	120	750	2560	6.25
03283802	E4410TRP		1000	3413	8.33
03283902	E4415TRP		1500	5120	12.5
03284002	F4420TRP	208	2000	6826	9.6

Accessories

MFG CATALOG NUMBER	MFG MODEL NUMBER	DESCRIPTION	WT. (LBS)
03299102	4400EX8	1” SEMI RECESSING EXTENDER	2
03299002	4400EX16	2” SEMI RECESSING EXTENDER	3
03298902	4400EX32	4” SURFACE MOUNTING FRAME	4
03284402	4300PB	WALL PLATE ADAPTOR (OD 21.5”x12.25”)	1