Pfister

Diverter Stem

910-022 ❑

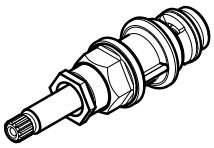

Specifications

Features

- Diverter Stem for Multi-Handle Valves
- Compression Stem
- Order Seat Separately: 970-5000
- Pforever Warranty®

Code Compliance

Pfister products are designed and manufactured in compliance with the following standards and codes:

- ASME A112.18.1

Dimensions

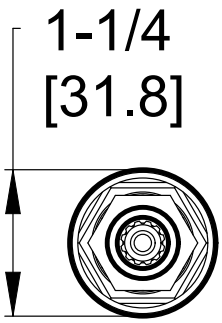

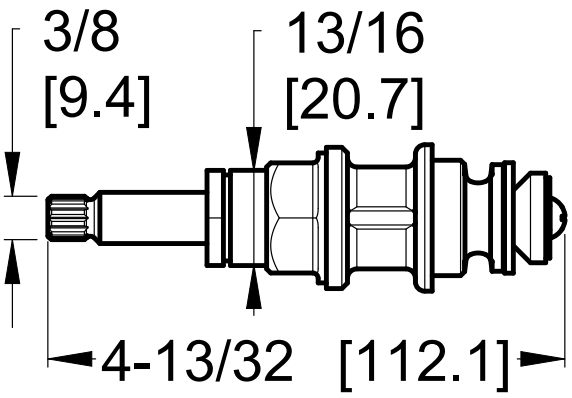

Copyright © 2018, Pfister Inc.