T&S BRASS AND BRONZE WORKS, INC.

2 Saddleback Cove / P.O. Box 1088
Travelers Rest, SC 29690

Travelers Rest, SC: 800-476-4103 • Simi Valley, CA: 800-423-0150 • Fax: 864-834-3518 • www.tsbrass.com

Model No.

B-0107

Item No.

This Space for Architect/Engineer Approval

Job Name_____Date_____

Model Specified_____ Quantity_____

Customer/Wholesaler_____

Contractor_____

Architect/Engineer_____

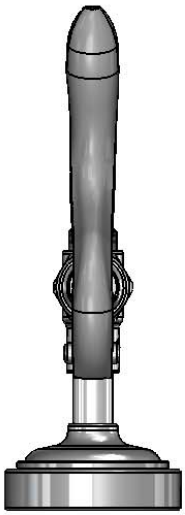

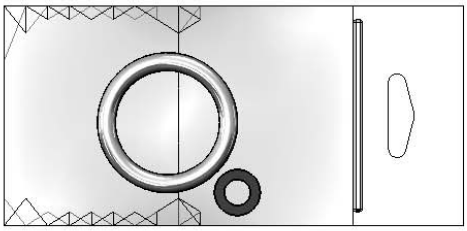

Hose Washer &
Hold Down Ring
(Included)

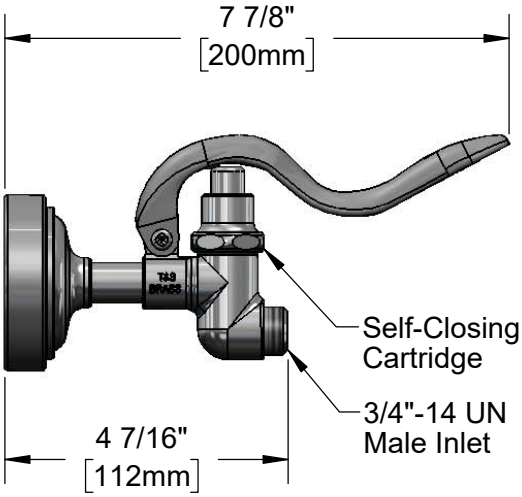

Flow Rate: 1.15 GPM (4.35 Lpm) @ 60 psi
Spray Force: 7.5 Ozf (212 Gramf) @ 60 psi

Product Specifications:

Pre-Rinse Self-Closing Spray Valve w/ Rubber Bumper
& 1.15 GPM Flow Control Spray Face

Product Compliance:

ASME A112.18.1 / CSA B125.1
NSF 61 - Section 9
NSF 372 (Low Lead Content)
2019 DOE PRSV - Class II

Drawn: AMG	Checked: JRM	Approved: JHB	Date: 10/15/18	Scale: 1:3	Sheet: 1 of 2