canplas PLUMBING

Submittal Sheet

Part Description:

3" X 3" X 2" ABS DWV 90 Degree Bend or Elbow with a 2" Low Heel Inlet H X H X H

Part Number:

102245

Approvals and Listings maintained by:
Canplas Industries Ltd
Canada: 1-800-461-5300 USA: 1-888-461-5307

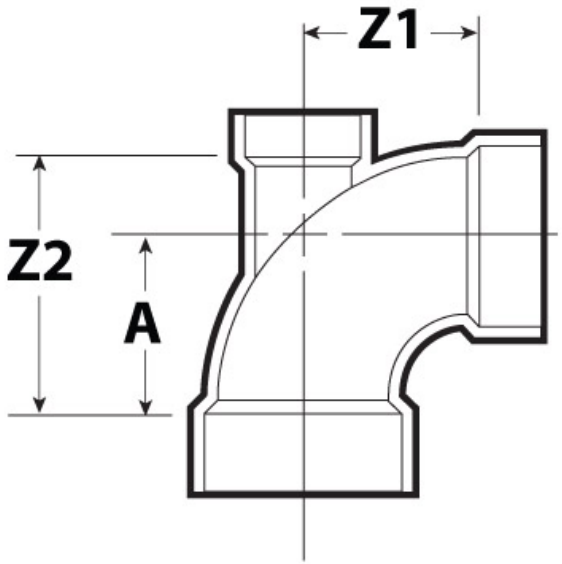

Part #	Part UPC	Colour	Size (inches)	Ctn Qty	Ctn Bar Code	Ctn. Wt (Kgs)	Ctn. Wt (lbs)	Skid Cubic (m)	Skid Cubic (ft)	Ctns/Skid
102245	662671106865	BLACK	3X3X2	25	10662671106862	10.09	22.20	1.90	67.04	18

Dimensions (inches)

A	Z1	Z2
2.81	2.81	4.40