RED KORKY PLUS FLAPPER

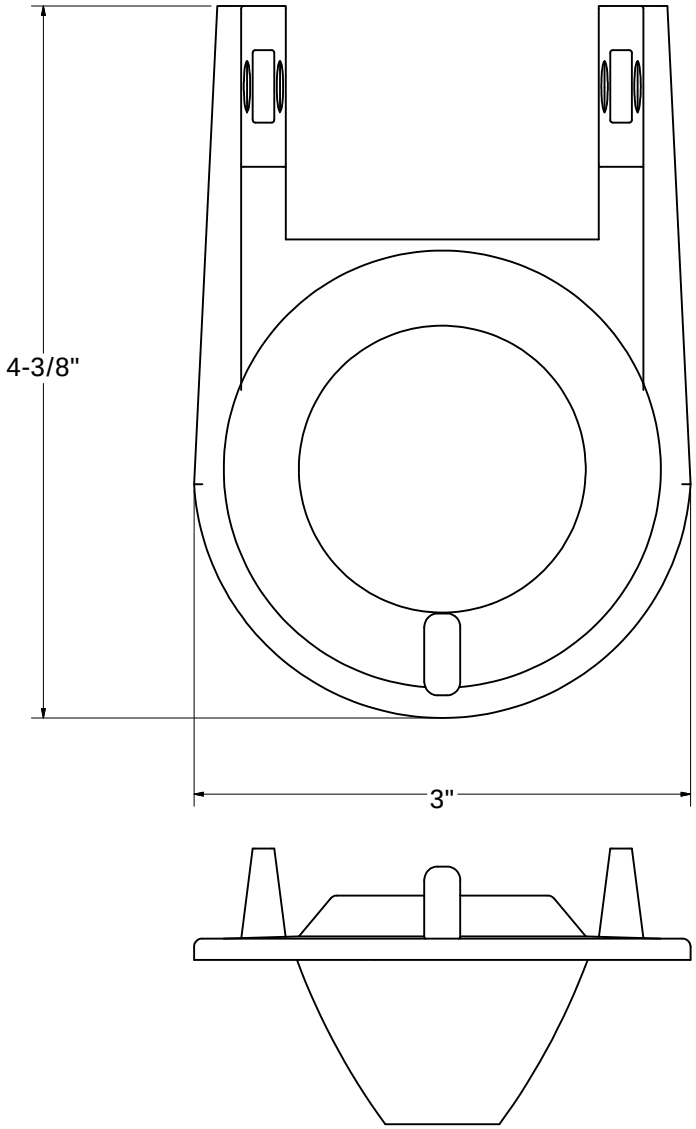

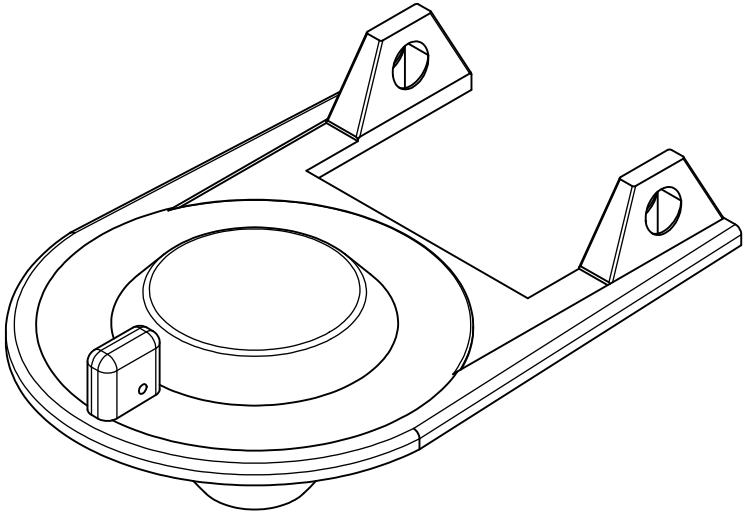

JONES STEPHENS We Got It	PHONE NUMBER 1-800-355-6637	PART NO.	C04016
	FAX NUMBER 1-800-462-6991	DESCRIPTION	RED KORKY PLUS (2001BP)
	SCALE 1.75 : 1 / DATE 11-15-2013		
	SHEET 1 OF 1	CTN/MSTR	12/72
	DRAWN BY ASHLEY KRALOVEC		