canplas PLUMBING

Submittal Sheet

Part Description:

1-1/2" ABS DWV 1/4 or 90 Degree Street Bend or Elbow, Spigot X H

Part Number:

102451

Approvals and Listings maintained by:
Canplas Industries Ltd
Canada: 1-800-461-5300 USA: 1-888-461-5307

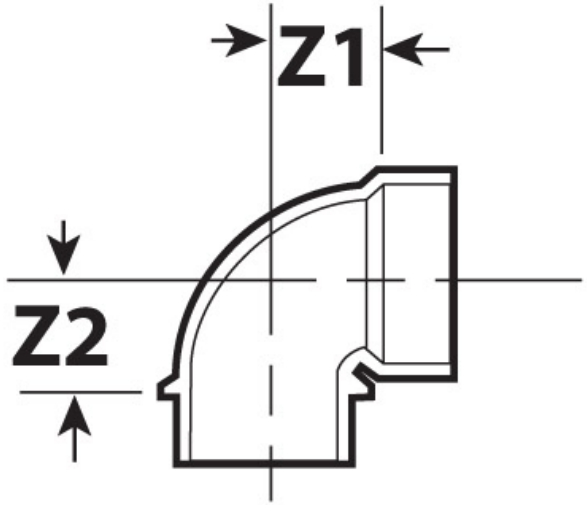

Part #	Part UPC	Colour	Size (inches)	Ctn Qty	Ctn Bar Code	Ctn. Wt (Kgs)	Ctn. Wt (lbs)	Skid Cubic (m)	Skid Cubic (ft)	Ctns/Skid
102451	662671101020	BLACK	1-1/2X1-1/2	125	10662671101027	8.14	17.91	1.86	65.82	32

Dimensions (inches)

Z1	Z2
1.10	1.23