SIEMENS

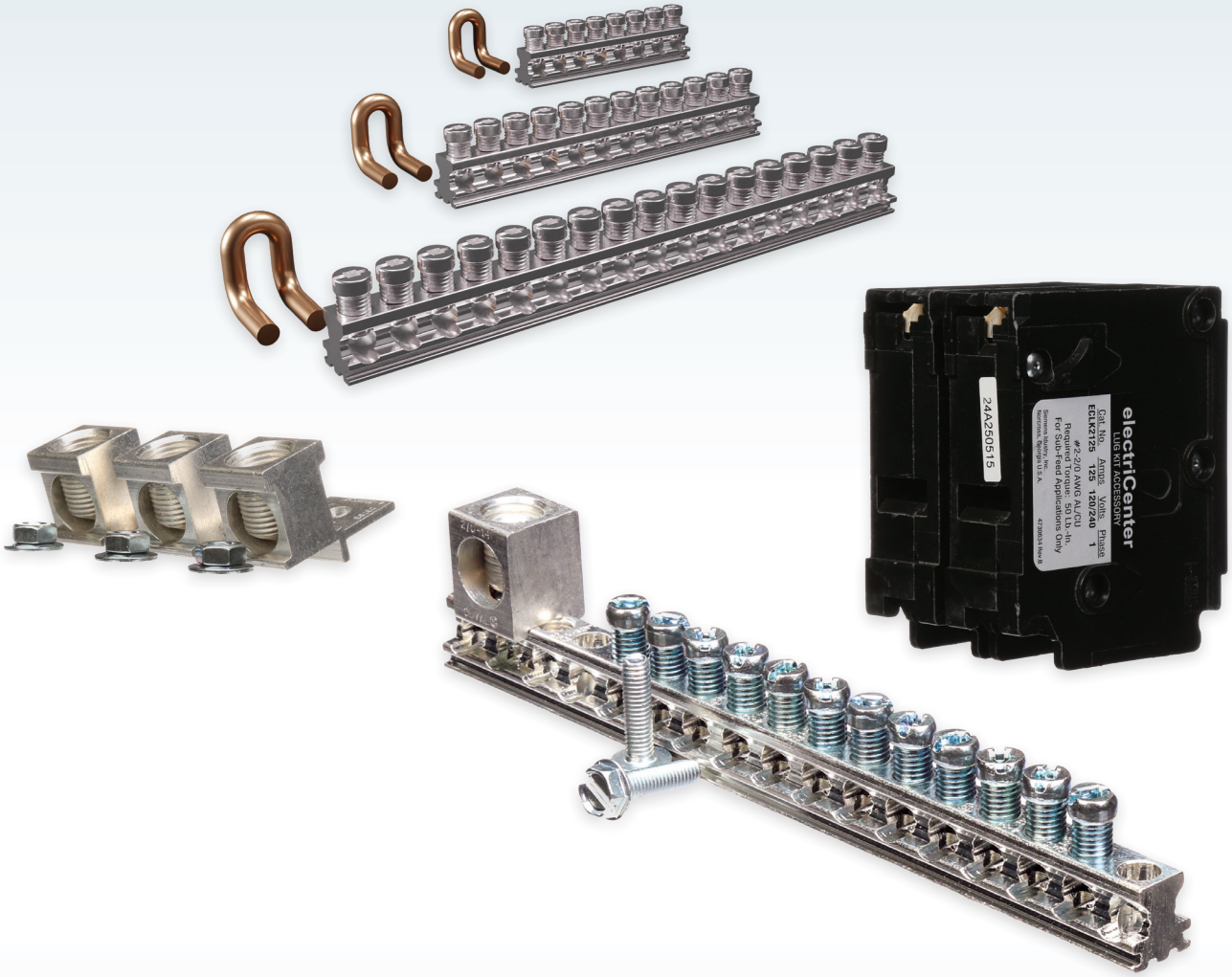

PN & SN Accessory & Replacement Parts Guide

usa.siemens.com/loadcenters

Product Accessories Wiring Diagram Example

The approved accessories for a specific panel, as well as other important technical information, are listed on the wiring diagram/label.

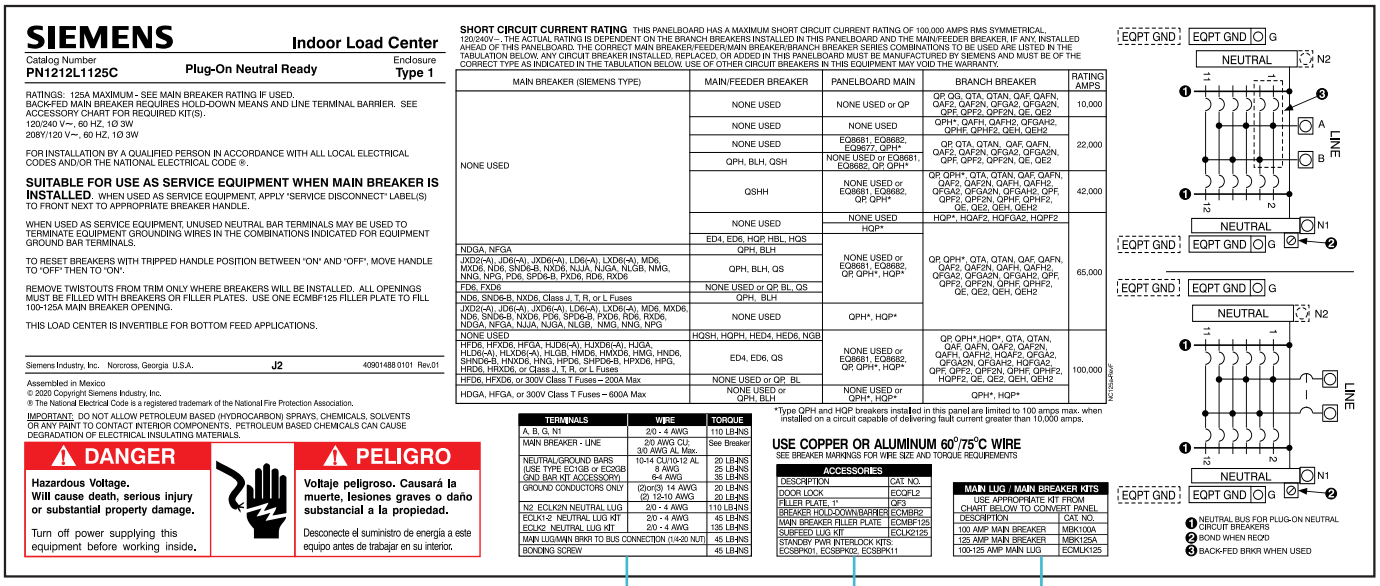

SIEMENS — **Indoor Load Center**

Catalog Number **PN1212L1125C** — **Plug-On Neutral Ready** — Enclosure **Type 1**

RATINGS: 125A MAXIMUM - SEE MAIN BREAKER RATING IF USED.
BACK-FED MAIN BREAKER REQUIRES HOLD-DOWN MEANS AND LINE TERMINAL BARRIER. SEE ACCESSORY CHART FOR REQUIRED KIT(S).
120/240 V~, 60 HZ. 1Ø 3W
208Y/120 V~, 60 HZ, 1Ø 3W

FOR INSTALLATION BY A QUALIFIED PERSON IN ACCORDANCE WITH ALL LOCAL ELECTRICAL CODES AND/OR THE NATIONAL ELECTRICAL CODE ®.

SUITABLE FOR USE AS SERVICE EQUIPMENT WHEN MAIN BREAKER IS INSTALLED. WHEN USED AS SERVICE EQUIPMENT, APPLY "SERVICE DISCONNECT" LABEL(S) TO FRONT NEXT TO APPROPRIATE BREAKER HANDLE.

WHEN USED AS SERVICE EQUIPMENT, UNUSED NEUTRAL BAR TERMINALS MAY BE USED TO TERMINATE EQUIPMENT GROUNDING WIRES IN THE COMBINATIONS INDICATED FOR EQUIPMENT GROUND BAR TERMINALS.

TO RESET BREAKERS WITH TRIPPED HANDLE POSITION BETWEEN "ON" AND "OFF", MOVE HANDLE TO "OFF" THEN TO "ON".

REMOVE TWISTOUTS FROM TRIM ONLY WHERE BREAKERS WILL BE INSTALLED. ALL OPENINGS MUST BE FILLED WITH BREAKERS OR FILLER PLATES. USE ONE ECMBF125 FILLER PLATE TO FILL 100-125A MAIN BREAKER OPENING.

THIS LOAD CENTER IS INVERTIBLE FOR BOTTOM FEED APPLICATIONS.

Siemens Industry, Inc. Norcross, Georgia U.S.A. **J2** 40901488 0101 Rev.01

Assembled in Mexico
© 2020 Copyright Siemens Industry, Inc.
® The National Electrical Code is a registered trademark of the National Fire Protection Association.

IMPORTANT: DO NOT ALLOW PETROLEUM BASED (HYDROCARBON) SPRAYS, CHEMICALS, SOLVENTS OR ANY PAINT TO CONTACT INTERIOR COMPONENTS. PETROLEUM BASED CHEMICALS CAN CAUSE DEGRADATION OF ELECTRICAL INSULATING MATERIALS.

DANGER
Hazardous Voltage.
Will cause death, serious injury or substantial property damage.
Turn off power supplying this equipment before working inside.

PELIGRO
Voltaje peligroso. Causará la muerte, lesiones graves o daño substancial a la propiedad.
Desconecte el suministro de energía a este equipo antes de trabajar en su interior.

SHORT CIRCUIT CURRENT RATING THIS PANELBOARD HAS A MAXIMUM SHORT CIRCUIT CURRENT RATING OF 100,000 AMPS RMS SYMMETRICAL, 120/240V~. THE ACTUAL RATING IS DEPENDENT ON THE BRANCH BREAKERS INSTALLED IN THIS PANELBOARD AND THE MAIN/FEEDER BREAKER, IF ANY, INSTALLED AHEAD OF THIS PANELBOARD. THE CORRECT MAIN BREAKER/FEEDER/MAIN BREAKER/BRANCH BREAKER SERIES COMBINATIONS TO BE USED ARE LISTED IN THE TABULATION BELOW. ANY CIRCUIT BREAKER INSTALLED, REPLACED, OR ADDED IN THIS PANELBOARD MUST BE MANUFACTURED BY SIEMENS AND MUST BE OF THE CORRECT TYPE AS INDICATED IN THE TABULATION BELOW. USE OF OTHER CIRCUIT BREAKERS IN THIS EQUIPMENT MAY VOID THE WARRANTY.

MAIN BREAKER (SIEMENS TYPE)	MAIN/FEEDER BREAKER	PANELBOARD MAIN	BRANCH BREAKER	RATING AMPS
NONE USED	NONE USED	NONE USED or QP	QP, QG, QTA, QTAN, QAF, QAFN, QAF2, QAF2N, QFGA2, QFGA2N, QPF, QPF2, QPF2N, QE, QE2	10,000
	NONE USED	NONE USED	QPH*, QAFH, QAFH2, QFGAH2, QPHF, QPHF2, QEH, QEH2	22,000
	NONE USED	EQ8681, EQ8682, EQ9677, QPH*	QP, QTA, QTAN, QAF, QAFN, QAF2, QAF2N, QFGA2, QFGA2N, QPF, QPF2, QPF2N, QE, QE2	
	QPH, BLH, QSH	NONE USED or EQ8681, EQ8682, QP, QPH*		
	QSHH	NONE USED or EQ8681, EQ8682, QP, QPH*	QP, QPH*, QTA, QTAN, QAF, QAFN, QAF2, QAF2N, QAFH, QAFH2, QFGA2, QFGA2N, QFGAH2, QPF, QPF2, QPF2N, QPHF, QPHF2, QE, QE2, QEH, QEH2	42,000
	NONE USED	NONE USED	HQP*, HQAF2, HQFGA2, HQPF2	65,000
		HQP*	QP, QPH*, QTA, QTAN, QAF, QAFN, QAF2, QAF2N, QAFH, QAFH2, QFGA2, QFGA2N, QFGAH2, QPF, QPF2, QPF2N, QPHF, QPHF2, QE, QE2, QEH, QEH2	
	ED4, ED6, HQP HBL, HQS			
NDGA, NFGA	QPH, BLH	NONE USED or EQ8681, EQ8682, QP, QPH*, HQP*		
JXD2(-A), JD6(-A), JXD6(-A), LD6(-A), LXD6(-A), MD6, MXD6, ND6, SND6-B, NXD6, NUJA, NJGA, NLGB, NMG, NNG, NPG, PD6, SPD6-B, PXD6, RD6, RXD6	QPH, BLH, QS			
FD6, FXD6	NONE USED or QP, BL, QS			
ND6, SND6-B, NXD6, Class J, T, R, or L Fuses	QPH, BLH			
JXD2(-A), JD6(-A), JXD6(-A), LD6(-A), LXD6(-A), MD6, MXD6, ND6, SND6-B, NXD6, PD6, SPD6-B, PXD6, RD6, RXD6, NDGA, NFGA, NUJA, NJGA, NLGB, NMG, NNG, NPG	NONE USED	QPH*, HQP*		
NONE USED	HQSH, HQPH, HED4, HED6, NGB	NONE USED or EQ8681, EQ8682, QP, QPH*, HQP*	QP, QPH*, HQP*, QTA, QTAN, QAF, QAFN, QAF2, QAF2N, QAFH, QAFH2, HQAF2, QFGA2, QFGA2N, QFGAH2, HQFGA2, QPF, QPF2, QPF2N, QPHF, QPHF2, HQPF2, QE, QE2, QEH, QEH2	100,000
HFD6, HFXD6, HFGA, HJD6(-A), HJXD6(-A), HJGA, HLD6(-A), HLXD6(-A), HLGB, HMD6, HMXD6, HMG, HND6, SHND6-B, HNXD6, HNG, HPD6, SHPD6-B, HPXD6, HPG, HRD6, HRXD6, or Class J, T, R, or L Fuses	ED4, ED6, QS			
HFD6, HFXD6, or 300V Class T Fuses – 200A Max	NONE USED or QP, BL			
HDGA, HFGA, or 300V Class T Fuses – 600A Max	NONE USED or QPH, BLH	NONE USED or QPH*, HQP*	QPH*, HQP*	

*Type QPH and HQP breakers installed in this panel are limited to 100 amps max. when installed on a circuit capable of delivering fault current greater than 10,000 amps.

USE COPPER OR ALUMINUM 60°/75°C WIRE
SEE BREAKER MARKINGS FOR WIRE SIZE AND TORQUE REQUIREMENTS

TERMINALS	WIRE	TORQUE
A, B, G, N1	2/0 - 4 AWG	110 LB-INS
MAIN BREAKER - LINE	2/0 AWG CU; 3/0 AWG AL Max.	See Breaker
NEUTRAL/GROUND BARS (USE TYPE EC1GB or EC2GB GND BAR KIT ACCESSORY)	10-14 CU/10-12 AL 8 AWG 6-4 AWG	20 LB-INS 25 LB-INS 35 LB-INS
GROUND CONDUCTORS ONLY	(2)or(3) 14 AWG (2) 12-10 AWG	20 LB-INS 20 LB-INS
N2 ECLK2N NEUTRAL LUG	2/0 - 4 AWG	110 LB-INS
ECLK1-2 NEUTRAL LUG KIT	2/0 - 4 AWG	45 LB-INS
ECLK2 NEUTRAL LUG KIT	2/0 - 4 AWG	135 LB-INS
MAIN LUG/MAIN BRKR TO BUS CONNECTION (1/4-20 NUT)		45 LB-INS
BONDING SCREW		45 LB-INS

ACCESSORIES	
DESCRIPTION	CAT. NO.
DOOR LOCK	ECQFL2
FILLER PLATE, 1"	QF3
BREAKER HOLD-DOWN/BARRIER	ECMBR2
MAIN BREAKER FILLER PLATE	ECMBF125
SUBFEED LUG KIT	ECLK2125
STANDBY PWR INTERLOCK KITS: ECSBPK01, ECSBPK02, ECSBPK11	

MAIN LUG / MAIN BREAKER KITS	
USE APPROPRIATE KIT FROM CHART BELOW TO CONVERT PANEL	
DESCRIPTION	CAT. NO.
100 AMP MAIN BREAKER	MBK100A
125 AMP MAIN BREAKER	MBK125A
100-125 AMP MAIN LUG	ECMLK125

TERMINALS	WIRE	TORQUE
A, B, G, N1	2/0 - 4 AWG	110 LB-INS
MAIN BREAKER - LINE	2/0 AWG CU; 3/0 AWG AL Max.	See Breaker
NEUTRAL/GROUND BARS (USE TYPE EC1GB or EC2GB GND BAR KIT ACCESSORY)	10-14 CU/10-12 AL 8 AWG 6-4 AWG	20 LB-INS 25 LB-INS 35 LB-INS
GROUND CONDUCTORS ONLY	(2)or(3) 14 AWG (2) 12-10 AWG	20 LB-INS 20 LB-INS
N2 ECLK2N NEUTRAL LUG	2/0 - 4 AWG	110 LB-INS
ECLK1-2 NEUTRAL LUG KIT ECLK2 NEUTRAL LUG KIT	2/0 - 4 AWG 2/0 - 4 AWG	45 LB-INS 135 LB-INS
MAIN LUG/MAIN BRKR TO BUS CONNECTION (1/4-20 NUT)		45 LB-INS
BONDING SCREW		45 LB-INS

Ground Bars
Page 3

Lug Kits
Page 3

ACCESSORIES	
DESCRIPTION	CAT. NO.
DOOR LOCK	ECQFL2
FILLER PLATE, 1"	QF3
BREAKER HOLD-DOWN/BARRIER	ECMBR2
MAIN BREAKER FILLER PLATE	ECMBF125
SUBFEED LUG KIT	ECLK2125
STANDBY PWR INTERLOCK KITS: ECSBPK01, ECSBPK02, ECSBPK11	

Miscellaneous
Page 5

Lug Kits
Page 3

Interlock Kits
Page 7

MAIN LUG / MAIN BREAKER KITS	
USE APPROPRIATE KIT FROM CHART BELOW TO CONVERT PANEL	
DESCRIPTION	CAT. NO.
100 AMP MAIN BREAKER	MBK100A
125 AMP MAIN BREAKER	MBK125A
100-125 AMP MAIN LUG	ECMLK125

Load Center Conversion Kits
Page 4

Ground Bar Kits

See Load Center Product Accessories Grid for more details.

Ground Bars

	Catalog No.	Description
EC1GB	EC1GB8	Ground Bar Kit-8 Pos
	EC1GB82	Ground Bar Kit-8 Pos, 2/0 Lug
EC2GB	EC2GB12	Ground Bar Kit-12 Pos
	EC2GB122	Ground Bar Kit-12 Pos, 2/0 Lug
	EC2GB15	Ground Bar Kit-15 Pos
	EC2GB152	Ground Bar Kit-15 Pos, 2/0 Lug
EC3GB	EC3GB21	Ground Bar Kit-21 Pos
	EC3GB212	Ground Bar Kit-21 Pos, 2/0 Lug
	EC3GB27	Ground Bar Kit-27 Pos
	EC3GB272	Ground Bar Kit-27 Pos, 2/0 Lug
	EC3GB30	Ground Bar Kit-30 Pos
	EC3GB302	Ground Bar Kit-30 Pos, 2/0 Lug
	EC3GB352	Ground Bar Kit-35 Pos, 2/0 Lug
	EC3GB352G	Ground Bar Kit-35 Pos, 2/0 Lug

Ground Bar Kit without Lug
EC2GB12

Ground Bar Kit with Lug
EC2GB122

Lug Kits

See Load Center Product Accessories Grid for more details.

Catalog No.	Description
ECLKB1	Neutral Lug Kit With Bond Tab
ECLK1-2	Neutral Lug Kit #4 To 2/0
ECLK2	Neutral Lug Kit #4-2/0
ECLK3	Neutral Lug Kit #1-300
ECLK2N	Neutral Lug Kit 100A-125A
ECLK3N	Neutral Lug Kit 150A-225A
ECLK2125	125A Sub Feed Lugs (Uses 2 Spaces)
ECLK2225	150A-225A Sub Feed Lugs (Uses 4 Spaces)
ECLK3225	3P Sub Feed Lugs (Uses 6 Spaces)
ECCS1	Collar Strap For Grd Bars #14-1/0
ECCS2	Collar Strap For Grd Bars #6-250
ECRLK250	Riser Lug Kit 250 kcmil
ECLK2SC	2/0 Lug For 125 A Neutral Feeder

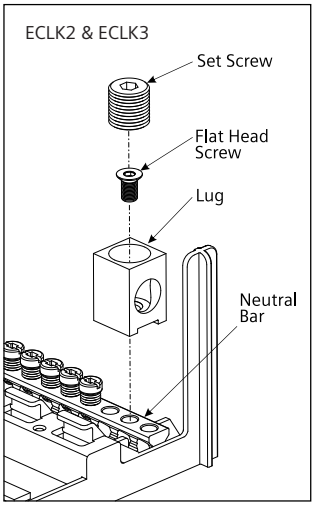

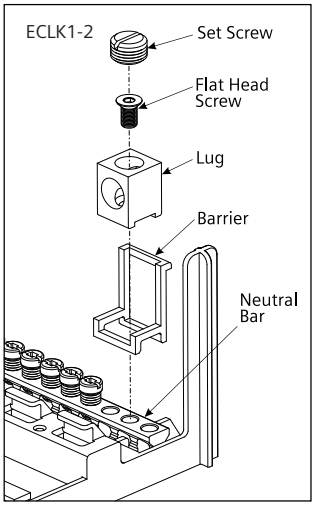

Main Breaker Conversion Kits

See Load Center Product Accessories Grid for more details.

Single Phase Main Breaker Kits

Catalog No.	Amperage	Phase	AIC
MBK100A	100A	1PH	22K
MBK125A	125A	1PH	22K
MBK150A	150A	1PH	22K
MBK200A	200A	1PH	22K
MBK225A	225A	1PH	22K

MBK100A
125A

MBK150A
200A, 225A

Three Phase Main Breaker Kits

Catalog No.	Amperage	Phase	AIC
MBK3100	100A	3PH	10K
MBK3125R	125A	3PH	10K
MBK3150R	150A	3PH	10K
MBK3175R	175A	3PH	10K
MBK3200R	200A	3PH	10K
MBK3225R	225A	3PH	10K
MBK3125HR	125A	3PH	22K
MBK3150HR	150A	3PH	22K
MBK3175HR	175A	3PH	22K
MBK3200HR	200A	3PH	22K
MBK3225HR	225A	3PH	22K
MBK3125HHR	125A	3PH	65K
MBK3150HHR	150A	3PH	65K
MBK3175HHR	175A	3PH	65K
MBK3200HHR	200A	3PH	65K
MBK3225HHR	225A	3PH	65K
HMBK3125HR	125A	3PH	100K
HMBK3150HR	150A	3PH	100K
HMBK3175HR	175A	3PH	100K
HMBK3200HR	200A	3PH	100K
HMBK3225HR	225A	3PH	100K

ECLK2125

ECLK3225

Main Lug Conversion Kits

Catalog No.	Amperage	Phase
ECMLK125	100-125A	1PH
ECMLK225	150-225A	1PH
ECMLK3125	100-125A	3PH
ECMLK3225	150-225A	3PH

ECMLK3225

Hubs

Catalog No.		Description	Hub Type	Picture	Application
ECHS	ECHS000	HS Type Closure Plate	ECHS	ECHS100	N3R PL & ES, Small Circuit Load Centers (except W0204ML1060)
	ECHS075	HS Type Hub - 3/4"			
	ECHS100	HS Type Hub - 1"			
	ECHS125	HS Type Hub - 1 1/4"			
	ECHS150	HS Type Hub - 1 1/2"			
	ECHS200	HS Type Hub - 2"			
	ECHS250	HS Type Hub - 2 1/2"			
ECHA	ECHA000	HA Type Closure Plate	ECHA	ECHA125	W0204ML1060
	ECHA075	HA Type Hub - 3/4'			
	ECHA100	HA Type Hub - 1"			
	ECHA125	HA Type Hub - 1 1/4"			
	ECHA150	HA Type Hub - 1 1/2"			
ECHV	ECHV000	HV Type Closure Plate	ECHV	ECHV200	350-400A N3R Load Centers
	ECHV200	HV Type Hub - 2"			
	ECHV250	HV Type Hub - 2.5"			
	ECHV300	HV Type Hub 3"			
	ECHV350	HV Type Hub - 3.5"			
	ECHV400	HV Type Hub - 4"			

Lock Kits

Catalog No.	Description
ECQFL1	Flush Lock Kit-Replacement For EQ LC
ECQFL2	Flush Lock Kit For ULT., PL, ES, 3Ph, 100A-225A
ECQFL3	Add-A-Lock (Flush Lock) For 300-400A LC

ECQFL2

ECQFL3

Miscellaneous Load Center Accessories

Catalog No.	Description	Pack Qty.
ECCP1	Pkg of 100 Circuit Directory	100
ECQF3	QP/BQ/ED2 Filler Plate	5
ECMBF125	1 Ph 100 & 125A Main Breaker Filler Plate	1
EC3PMFP1	3 Pole Main Filler Plate, QJ	1
EC3PMFPR	3 Pole Main Filler Plate, QR	1
ECSMK1	Surface Mount 1/4" Space Kit For LC's	4
ECTS2	LC Trim Screws	6
ECTS2W	LC Trim Screws White	6
ECLCHINGE	Grey LC Hinges	100
ECADHLCDIRLBL	Adhesive LC Directory Labels	100
ECSIELATCH	Siemens LC Latches	25
ECBONDSCRW	LC Bond Screw	10
ECAFL	Arc Flash Label	10
ECSN1	Screws and Nuts For HC Hub-Bottom Use	4

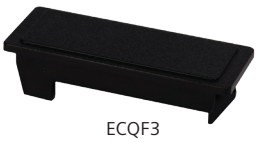

ECQF3

ECTS2

ECSIELATCH

ECLCHINGE

ECBONDSCRW

Neutral Kits

Key: Neutral Kits

10N = ECNB10N (Left Hand Neutral Bar Kit, 10 position)
6 = ECNBX6 (Neutral Extension Bar Kit, 6 position)
10 = ECNBX10 (Neutral Extension Bar Kit, 10 position)
15 = ECNBX15 (Neutral Extension Bar Kit, 15 position)

Catalog Number Indoor	Acceptable Neutral Kits	Catalog Number Outdoor	Acceptable Neutral Kits
PN1212L1125C	n/a	PNW0816B1150TC	n/a
PN1224B1100C	n/a	PNW0816B1200TC	n/a
PN1224L1125C	n/a	PNW0816L1200TC	n/a
PN1224L1200C	n/a	PNW1212L1125C	n/a
PN1632B1100C	n/a	PNW1224B1100C	n/a
PN1632L1125C	n/a	PNW1224L1125C	n/a
PN2020B1100C	6, 10	PNW1224L1200C	n/a
PN2020L1125C	6, 10	PNW1224L1225C	n/a
PN2040B1100C	n/a	PNW1632B1100C	n/a
PN2040B1150C	n/a	PNW1632L1125C	n/a
PN2040B1200C	n/a	PNW2020B1100C	6, 10
PN2040L1125C	n/a	PNW2040B1150C	n/a
PN2040L1150C	n/a	PNW2040B1200C	n/a
PN2040L1200C	n/a	PNW2040L1150C	n/a
PN2424B1100C	6, 10, 15	PNW2040L1200C	n/a
PN2448L1125C	n/a	PNW3048B1100C	6, 10
PN2448L1200C	n/a	PNW3048B1125C	6, 10
PN3030B1100C	10, 15	PNW3048B1150C	6, 10
PN3030B1125C	10, 15	PNW3048B1200C	6, 10
PN3030B1150C	10, 15	PNW3048L1125C	6, 10
PN3030L1200C	10, 15	PNW3048L1200C	6, 10
PN3048B1200	6, 10	PNW4040B1200C	6, 10, 15
PN3048B1200C	6, 10	PNW4040L1200C	6, 10, 15
PN3048B1200S14	6, 10, 15	PNW4264B1225C	10, 15
PN3048L1125C	6, 10	PNW4264L1225C	10, 15
PN3048L1200	6, 10		
PN3048L1200C	6, 10		
PN4040B1125C	6, 10, 15		
PN4040B1200	6, 10, 15		
PN4040B1200C	6, 10, 15		
PN4040L1200	6, 10, 15		
PN4040L1200C	6, 10, 15		
PN4060B1200	10, 15		
PN4060B1200C	10, 15		
PN4060B1200S14	10, 15		
PN4060L1200C	10, 15		
PN4264B1225C	10, 15		
PN4264L1225C	10, 15		
PN5482B1200C	6, 10, 15		
PN5482B1225C	6, 10, 15		
PN5482L1225C	6, 10, 15		

Catalog Number Indoor	Acceptable Neutral Kits	Catalog Number Outdoor	Acceptable Neutral Kits
SN1212L1125	10N	SNW0816B11200T	n/a
SN1224B1100	n/a	SNW0816L1200T	n/a
SN1224L1125	n/a	SNW1212L1125	10N
SN1224L1200	n/a	SNW1224B1100	n/a
SN1632B1100	6	SNW1224B1125	n/a
SN1632B1125	6	SNW1224B1200	n/a
SN1632B1150	6	SNW1224L1125	n/a
SN1632B1200	6	SNW1224L1200	n/a
SN1632L1125	6	SNW1224L1225	n/a
SN1632L1150	6	SNW1632B1100	6
SN2020B1100	10N, 6, 10	SNW1632L1125	6
SN2020L1125	10N, 10, 6	SNW2020B1100	10N, 6, 10
SN2040B1100	6	SNW2040B1125	6
SN2040B1150	6	SNW2040B1150	6
SN2040B1200	6	SNW2040B1200	6
SN2040C1200	6	SNW2040C1200	6
SN2040L1125	6	SNW2040L1125	6
SN2040L1150	6	SNW2040L1150	6
SN2040L1200	6	SNW2040L1200	6
SN2424B1125	10N, 6, 10, 15	SNW2424B1125	10N, 6, 10,15
SN2424C1125	10N,15, 10, 6	SNW2424C1125	10N,15, 10, 6
SN2424L1125	10N, 10, 6	SNW2424L1125	10N, 10, 6
SN2448B1100	6,10	SNW3048B1125	6,10,15
SN2448B1150	6,10	SNW3048B1150	6,10,15
SN2448B1200	6,10	SNW3048B1200	6,10,15
SN2448L1125	6, 10	SNW3048C1200	6, 10, 15
SN2448L1150	6, 10	SNW3048L1125	6, 10, 15
SN2448L1200	6, 10	SNW3048L1200	6, 10, 15
SN3030B1100	6,10,15	SNW4040B1150	10,15
SN3030B1125	6,10,15	SNW4040B1200	10,15
SN3030B1150	6,10,15	SNW4040C1200	10, 15
SN3030L1200	6, 10, 15	SNW4040L1200	10, 15
SN3048B1100	6,10,15	SNW4264B1200	6, 10, 15
SN3048B1125	6,10,15	SNW4264B1225	6, 10, 15
SN3048B1150	6,10,15	SNW4264L1225	6, 10, 15
SN3048B1200	6,10,15		
SN3048B1200S06	6, 10, 15		
SN3048C1200	6, 10, 15		
SN3048L1125	6, 10, 15		
SN3048L1200	6, 10, 15		
SN3048L1200L50	6, 10, 15		
SN4040B1200	10,15		
SN4040C1200	10, 15		
SN4040L1125	10, 15		
SN4040L1200	10, 15		
SN4060B1200	6,10,15		
SN4060B1200S06	6, 10, 15		
SN4060L1225	6, 10, 15		
SN4264B1200	6, 10, 15		
SN4264B1225	6, 10, 15		
SN4264L1225	6, 10, 15		
SN5482B1200	6, 10, 15		
SN5482B1225	6, 10, 15		
SN5482L1225	6, 10, 15		

Manual Transfer Interlock Kits for Load Centers and Meter Combinations

Prevents dangerous feedback between two sources of power

Manual Transfer Interlock Kits[1]

Catalog number	Usage Information	Utility main breaker types	Standby main breaker types	Interlock Number
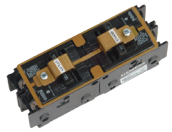 **ECSBPK01**	For use on load centers or meter combinations that will accept 2-pole circuit breakers opposite one another as shown.	QP, QPH, HQPH	QP, QPH, HQPH	1 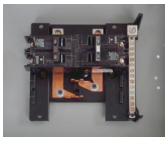
ECSBPK02	For use on load centers or meter combinations that will accept 2- or 4-pole next to a 2-pole circuit breaker side by side as shown.	QP, QPH, HQPH	QP, QPH, HQPH	2 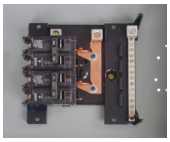
ECSBPK03	For use on Ultimate™ and Rock Solid load centers, 150 amp and higher, to connect the main breaker to a 2-pole circuit breaker.	MBK150A, MBK200A, OR MBK225A	QP, QPH, HQPH	3 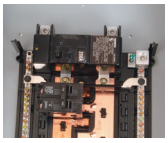
ECSBPK10	For use on PN and SN plug-on neutral load centers, 150 amp and higher, to connect the main breaker to a 2-pole circuit breaker.			
ECSBPK04	For use on Ultimate™ and Rock Solid load centers, 125 amp and lower, to connect the main breaker to a 2-pole circuit breaker.	MBK100A or MBK125A	QP, QPH, HQPH	4 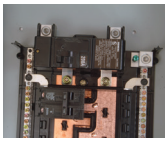
ECSBPK11	For use on PN and SN plug-on neutral load centers, 125 amp and lower, to connect the main breaker to a 2-pole circuit breaker.			
ECSBPK05	For use on load centers or meter combinations that will accept a QNR (MD-TR) frame circuit breaker next to a 2-pole circuit breaker as shown.	QNR, QNRH, HQNR	QP, QPH, HQPH	5 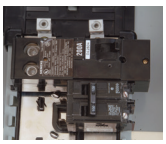
ECSBPK06	For use on load centers or meter combinations that will accept a QN (MD-T) frame circuit breaker next to a 2-pole circuit breaker as shown.	QN, QNH, HQN	QP, QPH, HQPH	6 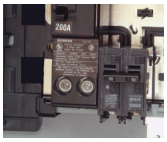
ECSBPK07	For use on load centers or meter combinations that will accept two QNR (MD-TR) circuit breakers side by side as shown OR will accept two QN (MD-T) circuit breakers side by side as shown.	QNR, QNRH, HQNR, QN, QNH, HQN	QNR, QNRH, HQNR QN, QNH, HQN	7

[1] Manual breaker interlock kits are attached to the breakers not the trim of the load center.

Table of Contents

Load Center Product Accessory Grids	
PN Series – N1, Single Phase	8-9
SN Series – N1, Single Phase	10-11
PN Series – N3R, Single Phase	12
SN Series – N3R, Single Phase	13
PL Series – N1, Three Phase	14
PL Series – N3R, Three Phase	14
ES Series – N1, Three Phase	15
ES Series – N3R, Three Phase	15

Replacement Part Grids	
1 Phase PN Series	14 - 15
1 Phase SN Series	16 - 18
3 Phase PL & ES Series	19

Load Center Product Accessory Grid

PN Series – N1, Single Phase

	Ground Bars and Lug Kits										Load Center Conversion Kits							Interlock Kits					
Catalog Number	EC1GB	EC2GB	EC3GB	ECLK3	ECLK1-2	ECLK2	ECLK2125	ECLK2225	ECLK2N	ECLK3N	MBK100A	MBK125A	MBK150A	MBK200A	MBK225A	ECMLK125	ECMLK225	ECSBPK01	ECSBPK02	ECSBPK05	ECSBPK07	ECSBPK10	ECSBPK11
PN1212L1125C	•	•			•	•	•		•		•	•				•		•	•				•
PN1224B1100C	•	•			•	•	•		•		•					•		•	•				•
PN1224L1125C	•	•			•	•	•		•		•	•				•		•	•				•
PN1224L1200C		•	•	•	•	•	•	•	•	•			•	•			•	•	•	•	•	•	
PN1632B1100C		•	•		•	•	•		•		•					•		•	•				•
PN1632L1125C		•	•		•	•	•		•		•	•				•		•	•				•
PN2020B1100C		•	•		•	•	•		•		•					•		•	•				•
PN2020L1125C		•	•		•	•	•		•		•	•				•		•	•				•
PN2040B1100C		•	•		•	•	•		•		•					•		•	•				•
PN2040B1150C		•	•	•	•	•	•	•	•	•			•				•	•	•	•	•	•	
PN2040B1200C		•	•	•	•	•	•	•	•	•			•	•			•	•	•	•	•	•	
PN2040L1125C		•	•		•	•	•		•		•	•				•		•	•				•
PN2040L1150C		•	•	•	•	•	•	•	•	•			•				•	•	•	•	•	•	
PN2040L1200C		•	•	•	•	•	•	•	•	•			•	•			•	•	•	•	•	•	
PN2424B1100C		•	•		•	•	•		•		•					•		•	•				•
PN2448L1125C		•	•		•	•	•		•		•	•				•		•	•				•
PN2448L1200C		•	•	•	•	•	•	•	•	•			•	•			•	•	•	•	•	•	
PN3030B1100C		•	•		•	•	•		•		•					•		•	•				•
PN3030B1125C		•	•		•	•	•		•		•	•				•		•	•				•
PN3030B1150C		•	•	•	•	•	•	•	•	•			•				•	•	•	•	•	•	
PN3030L1200C		•	•	•	•	•	•	•	•	•			•	•			•	•	•	•	•	•	
PN3048B1200		•	•	•	•	•	•	•	•	•			•	•			•	•	•	•	•	•	
PN3048B1200C		•	•	•	•	•	•	•	•	•			•	•			•	•	•	•	•	•	
PN3048B1200S14		•	•	•	•	•	•	•	•	•			•	•			•	•	•	•	•	•	
PN3048L1125C		•	•		•	•	•		•		•	•				•		•	•				•
PN3048L1200		•	•	•	•	•	•	•	•	•			•	•			•	•	•	•	•	•	

Load Center Product Accessory Grid

PN Series – N1, Single Phase

Catalog Number	Ground Bars and Lug Kits										Load Center Conversion Kits							Interlock Kits					
	EC1GB	EC2GB	EC3GB	ECLK3	ECLK1-2	ECLK2	ECLK2125	ECLK2225	ECLK2N	ECLK3N	MBK100A	MBK125A	MBK150A	MBK200A	MBK225A	ECMLK125	ECMLK225	ECSBPK01	ECSBPK02	ECSBPK05	ECSBPK07	ECSBPK10	ECSBPK11
PN3048L1200C		•	•	•	•	•	•	•	•	•			•	•			•	•	•	•	•	•	
PN4040B1200		•	•	•	•	•	•	•	•	•			•	•			•	•	•	•	•	•	
PN4040B1200C		•	•	•	•	•	•	•	•	•			•	•			•	•	•	•	•	•	
PN4040L1125C		•	•		•	•	•		•		•	•				•		•	•				•
PN4040L1200		•	•	•	•	•	•	•	•	•			•	•			•	•	•	•	•	•	
PN4040L1200C		•	•	•	•	•	•	•	•	•			•	•			•	•	•	•	•	•	
PN4060B1200		•	•	•	•	•	•	•	•	•			•	•			•	•	•	•	•	•	
PN4060B1200C		•	•	•	•	•	•	•	•	•			•	•			•	•	•	•	•	•	
PN4060B1200S14		•	•	•	•	•	•	•	•	•			•	•			•	•	•	•	•	•	
PN4060L1200C		•	•	•	•	•	•	•	•	•			•	•			•	•	•	•	•	•	
PN4264B1225C		•	•	•	•	•	•	•	•	•			•	•	•		•	•	•	•	•	•	
PN4264L1225C		•	•	•	•	•	•	•	•	•			•	•	•		•	•	•	•	•	•	
PN5482B1200C		•	•	•	•	•	•	•	•	•			•	•			•	•	•	•	•	•	
PN5482B1225C		•	•	•	•	•	•	•	•	•			•	•	•		•	•	•	•	•	•	
PN5482L1225C		•	•	•	•	•	•	•	•	•			•	•	•		•	•	•	•	•	•	

Load Center Product Accessory Grid

SN Series – N1, Single Phase

Catalog Number	Ground Bars and Lug Kits										Load Center Conversion Kits							Interlock Kits					
	EC1GB	EC2GB	EC3GB	ECLK3	ECLK1-2	ECLK2	ECLK2125	ECLK2225	ECLK2N	ECLK3N	MBK100A	MBK125A	MBK150A	MBK200A	MBK225A	ECMLK125	ECMLK225	ECSBPK01	ECSBPK02	ECSBPK05	ECSBPK07	ECSBPK10	ECSBPK11
SN1212L1125	•	•			•	•	•		•							•		•	•				
SN1224B1100	•	•			•	•	•		•		•												•
SN1224L1125	•	•			•	•	•		•							•		•	•				
SN1224L1200		•	•	•	•	•	•	•	•	•							•	•	•	•	•		
SN1632B1100		•	•		•	•	•		•		•												•
SN1632B1125		•	•		•	•	•		•		•	•											•
SN1632B1150		•	•	•	•	•	•	•	•	•			•									•	
SN1632B1200		•	•	•	•	•	•	•	•	•			•	•								•	
SN1632L1125		•	•		•	•	•		•							•		•	•				
SN1632L1150		•	•	•	•	•	•	•	•	•							•	•	•	•	•		
SN2020B1100		•	•		•	•	•		•		•												•
SN2020L1125		•	•		•	•	•		•							•		•	•				
SN2040B1100		•	•		•	•	•		•		•												•
SN2040B1150		•	•	•	•	•	•	•	•	•			•									•	
SN2040B1200		•	•	•	•	•	•	•	•	•			•	•								•	
SN2040C1200		•	•	•	•	•	•	•	•	•			•	•			•	•	•	•	•	•	
SN2040L1125		•	•		•	•	•		•							•		•	•				
SN2040L1150		•	•	•	•	•	•	•	•	•							•	•	•	•	•		
SN2040L1200		•	•	•	•	•	•	•	•	•							•	•	•	•	•		
SN2424B1125		•	•		•	•	•		•		•	•											•
SN2424C1125		•	•		•	•	•		•		•	•				•		•	•				•
SN2424L1125		•	•		•	•	•		•							•		•	•				
SN2448B1100		•	•		•	•	•		•		•												•
SN2448B1150		•	•	•	•	•	•	•	•	•			•									•	
SN2448B1200		•	•	•	•	•	•	•	•	•			•	•								•	
SN2448L1125		•	•		•	•	•		•							•		•	•				
SN2448L1150		•	•	•	•	•	•	•	•	•							•	•	•	•	•		
SN2448L1200		•	•	•	•	•	•	•	•	•							•	•	•	•	•		
SN3030B1100		•	•		•	•	•		•		•												•
SN3030B1125		•	•		•	•	•		•		•	•											•
SN3030B1150		•	•	•	•	•	•	•	•	•			•									•	
SN3030L1200		•	•	•	•	•	•	•	•	•							•	•	•	•	•		
SN3048B1100		•	•		•	•	•		•		•												•
SN3048B1125		•	•		•	•	•		•		•	•											•
SN3048B1150		•	•	•	•	•	•	•	•	•			•									•	
SN3048B1200		•	•	•	•	•	•	•	•	•			•	•								•	
SN3048B1200S06		•	•	•	•	•	•	•	•	•			•	•								•	
SN3048C1200		•	•	•	•	•	•	•	•	•			•	•			•	•	•	•	•	•	
SN3048L1125		•	•		•	•	•		•							•		•	•				
SN3048L1200		•	•	•	•	•	•	•	•	•							•	•	•	•	•		

Load Center Product Accessory Grid

SN Series – N1, Single Phase

Catalog Number	Ground Bars and Lug Kits										Load Center Conversion Kits							Interlock Kits					
	EC1GB	EC2GB	EC3GB	ECLK3	ECLK1-2	ECLK2	ECLK2125	ECLK2225	ECLK2N	ECLK3N	MBK100A	MBK125A	MBK150A	MBK200A	MBK225A	ECMLK125	ECMLK225	ECSBPK01	ECSBPK02	ECSBPK05	ECSBPK07	ECSBPK10	ECSBPK11
SN3048L1200L50		•	•	•	•	•	•	•	•	•							•	•	•	•	•		
SN4040B1200		•	•	•	•	•	•	•	•	•			•	•								•	
SN4040C1200		•	•	•	•	•	•	•	•	•			•	•			•	•	•	•	•	•	
SN4040L1125		•	•		•	•	•		•							•		•	•				
SN4040L1200		•	•	•	•	•	•	•	•	•							•	•	•	•	•		
SN4060B1200		•	•	•	•	•	•	•	•	•			•	•								•	
SN4060B1200S06		•	•	•	•	•	•	•	•	•			•	•								•	
SN4060L1225		•	•	•	•	•	•	•	•	•							•	•	•	•	•		
SN4264B1200		•	•	•	•	•	•	•	•	•			•	•								•	
SN4264B1225		•	•	•	•	•	•	•	•	•			•	•	•							•	
SN4264L1225		•	•	•	•	•	•	•	•	•							•	•	•	•	•		
SN5482B1200		•	•	•	•	•	•	•	•	•			•	•								•	
SN5482B1225		•	•	•	•	•	•	•	•	•			•	•	•							•	
SN5482L1225		•	•	•	•	•	•	•	•	•							•	•	•	•	•		

Load Center Product Accessory Grid

PN Series – N3R, Single Phase

Catalog Number	Ground Bars and Lug Kits										Load Center Conversion Kits							Interlock Kits					
	EC1GB	EC2GB	EC3GB	ECLK3	ECLK1-2	ECLK2	ECLK2125	ECLK2225	ECLK2N	ECLK3N	MBK100A	MBK125A	MBK150A	MBK200A	MBK225A	ECMLK125	ECMLK225	ECSBPK01	ECSBPK02	ECSBPK05	ECSBPK07	ECSBPK10	ECSBPK11
PNW0816B1150TC	•	•	•	•	•	•							•	•		•	•	•	•	•	•	•	
PNW0816B1200TC	•	•	•	•	•	•	•	•					•	•			•	•	•	•	•	•	
PNW0816L1200TC	•	•	•	•	•	•	•	•					•	•			•	•	•	•	•	•	
PNW1212L1125C	•	•			•	•	•		•		•	•				•		•	•				•
PNW1224B1100C	•	•			•	•	•		•		•					•		•	•				•
PNW1224L1125C	•	•			•	•	•		•		•	•				•		•	•				•
PNW1224L1200C	•	•	•	•	•	•	•	•	•	•			•	•			•	•	•	•	•	•	
PNW1224L1225C		•	•	•	•	•	•	•	•	•			•	•	•		•	•	•	•	•	•	
PNW1632B1100C	•	•	•		•	•	•		•		•					•		•	•				•
PNW1632L1125C		•	•		•	•	•		•		•	•				•		•	•				•
PNW2020B1100C		•	•		•	•	•		•		•					•		•	•				•
PNW2040B1150C		•	•	•	•	•			•	•			•			•	•	•	•	•	•	•	
PNW2040B1200C		•	•	•	•	•	•	•	•	•			•	•			•	•	•	•	•	•	
PNW2040L1150C		•	•	•	•	•			•	•			•			•	•	•	•	•	•	•	
PNW2040L1200C		•	•	•	•	•	•	•	•	•			•	•			•	•	•	•	•	•	
PNW3048B1100C		•	•		•	•	•		•		•					•		•	•				•
PNW3048B1125C		•	•		•	•	•		•		•	•				•		•	•				•
PNW3048B1150C		•	•	•	•	•			•	•			•			•	•	•	•	•	•	•	
PNW3048B1200C		•	•	•	•	•	•	•	•	•			•	•			•	•	•	•	•	•	
PNW3048L1125C		•	•		•	•	•		•		•	•				•		•	•				•
PNW3048L1200C		•	•	•	•	•	•	•	•	•			•	•			•	•	•	•	•	•	
PNW4040B1200C		•	•	•	•	•	•	•	•	•			•	•			•	•	•	•	•	•	
PNW4040L1200C		•	•	•	•	•	•	•	•	•			•	•			•	•	•	•	•	•	
PNW4264B1225C		•	•	•	•	•	•	•	•	•			•	•	•		•	•	•	•	•	•	
PNW4264L1225C		•	•	•	•	•	•	•	•	•			•	•	•		•	•	•	•	•	•	

Load Center Product Accessory Grid

SN Series – N3R, Single Phase

Catalog Number	Ground Bars and Lug Kits										Load Center Conversion Kits							Interlock Kits					
	EC1GB	EC2GB	EC3GB	ECLK3	ECLK1-2	ECLK2	ECLK2125	ECLK2225	ECLK2N	ECLK3N	MBK100A	MBK125A	MBK150A	MBK200A	MBK225A	ECMLK125	ECMLK225	ECSBPK01	ECSBPK02	ECSBPK05	ECSBPK07	ECSBPK10	ECSBPK11
SNW0816B1200T		•	•	•	•	•	•	•					•	•								•	
SNW0816L1200T		•	•	•	•	•	•	•									•	•	•	•	•		
SNW1212L1125	•	•			•	•	•		•							•		•	•				
SNW1224B1100	•	•			•	•	•		•		•												•
SNW1224B1125		•	•		•	•	•		•		•	•											•
SNW1224B1200		•	•	•	•	•	•	•	•	•			•	•								•	
SNW1224L1125		•	•		•	•	•		•							•		•	•				
SNW1224L1200	•	•		•	•	•	•	•	•	•							•	•	•	•	•		
SNW1224L1225	•		•	•	•	•	•	•	•	•							•	•	•	•	•		
SNW1632B1100		•	•		•	•	•		•		•												•
SNW1632L1125	•	•			•	•	•		•							•		•	•				
SNW2020B1100		•	•		•	•	•		•		•												•
SNW2040B1125		•	•		•	•	•		•		•	•				•							•
SNW2040B1150		•	•	•	•	•	•	•	•	•			•									•	
SNW2040B1200		•	•	•	•	•	•	•	•	•			•	•								•	
SNW2040C1200		•	•	•	•	•	•	•	•	•			•	•			•	•	•	•	•	•	
SNW2040L1125		•	•		•	•	•		•							•		•	•				
SNW2040L1150		•	•	•	•	•	•	•	•	•							•	•	•	•	•		
SNW2040L1200		•	•	•	•	•	•	•	•	•							•	•	•	•	•		
SNW2424B1125		•	•		•	•	•		•		•	•											•
SNW2424C1125		•	•		•	•	•		•		•	•				•		•	•				•
SNW2424L1125		•	•		•	•	•		•							•		•	•				
SNW3048B1125		•	•		•	•	•		•		•	•											•
SNW3048B1150		•	•	•	•	•	•	•	•	•			•									•	
SNW3048B1200		•	•	•	•	•	•	•	•	•			•	•								•	
SNW3048C1200		•	•	•	•	•	•	•	•	•			•	•			•	•	•	•	•	•	
SNW3048L1125		•	•		•	•	•		•							•		•	•				
SNW3048L1200		•	•	•	•	•	•	•	•	•							•	•	•	•	•		
SNW4040B1150		•	•	•	•	•	•	•	•	•			•									•	
SNW4040B1200		•	•	•	•	•	•	•	•	•			•	•								•	
SNW4040C1200		•	•	•	•	•	•	•	•	•			•	•			•	•	•	•	•	•	
SNW4040L1200		•	•	•	•	•	•	•	•	•							•	•	•	•	•		
SNW4264B1200		•	•	•	•	•	•	•	•	•			•	•								•	
SNW4264B1225		•	•	•	•	•	•	•	•	•			•	•	•							•	
SNW4264L1225		•	•	•	•	•	•	•	•	•							•	•	•	•	•		

Load Center Product Accessory Grid

PL Series – N1, Three Phase

Catalog Number	Ground Bars and Lug Kits			Load Center Conversion Kits						Interlock Kits							
	EC1GB	EC2GB	EC3GB	ECLK3	ECLK1-2	ECLK2	ECLK2125	ECLK2225	ECLK3225	MBK3100	MBK3125	MBK3150	MBK3175	MBK3200	MBK3225	ECMLK3125	ECMLK3225
P1224B3100CU		•	•		•	•	•			•						•	
P1224L3125CU		•			•	•	•			•						•	
P2442B3150CU			•	•	•	•	•	•	•	•	•	•					•
P2442L3200CU			•	•	•	•	•	•	•	•	•	•	•	•			•
P3030B3125CU			•		•	•	•			•	•					•	
P3042B3100CU			•		•	•	•			•						•	
P3054B3200CU			•	•	•	•	•	•	•	•	•	•	•	•			•
P3054L3200CU			•	•	•	•	•	•	•	•	•	•	•	•			•
P4242B3150CU			•	•	•	•	•	•	•	•	•	•					•
P4260B3200CU			•	•	•	•	•	•	•	•	•	•	•	•			•
P4260B3225CU			•	•	•	•	•	•	•	•	•	•	•	•	•		•
P4260B3225TCU			•	•	•	•	•	•	•	•	•	•	•	•	•		•
P4260L3225CU			•	•	•	•	•	•	•	•	•	•	•	•	•		•
P5470B3225CU			•	•	•	•	•	•	•	•	•	•	•	•	•		•
P5470L3225CU			•	•	•	•	•	•	•	•	•	•	•	•	•		•

Load Center Product Accessory Grid

PL Series – N3R, Three Phase

Catalog Number	Ground Bars and Lug Kits			Load Center Conversion Kits						Interlock Kits							
	EC1GB	EC2GB	EC3GB	ECLK3	ECLK1-2	ECLK2	ECLK2125	ECLK2225	ECLK3225	MBK3100	MBK3125	MBK3150	MBK3175	MBK3200	MBK3225	ECMLK3125	ECMLK3225
PW1224L3125CU		•			•	•	•			•						•	
PW2442L3200CU			•	•	•	•	•	•	•	•	•	•	•	•			•
PW3054B3200CU			•	•	•	•	•	•	•	•	•	•	•	•			•
PW3054L3200CU			•	•	•	•	•	•	•	•	•	•	•	•			•
PW4260B3200CU			•	•	•	•	•	•	•	•	•	•	•	•			•
PW4260L3225CU			•	•	•	•	•	•	•	•	•	•	•	•	•		•

Load Center Product Accessory Grid

ES Series – N1, Three Phase

Catalog Number	Ground Bars and Lug Kits			Load Center Conversion Kits						Interlock Kits							
	EC1GB	EC2GB	EC3GB	ECLK3	ECLK1-2	ECLK2	ECLK2125	ECLK2225	ECLK3225	MBK3100	MBK3125	MBK3150	MBK3175	MBK3200	MBK3225	ECMLK3125	ECMLK3225
S1224B3100		•	•		•	•	•			•						•	
S1224L3125		•			•	•	•			•						•	
S1224L3200		•		•	•	•	•	•	•	•							•
S1836L3150		•	•	•	•	•	•	•	•	•							•
S2442B3150			•	•	•	•	•	•	•	•	•	•					•
S2442L3150			•	•	•	•	•	•	•	•							•
S2442L3200			•	•	•	•	•	•	•	•							•
S3030B3100			•		•	•	•			•						•	
S3042B3100			•		•	•	•			•						•	
S3042B3125			•		•	•	•			•	•					•	
S3054B3150			•	•	•	•	•	•	•	•	•	•					•
S3054B3200			•	•	•	•	•	•	•	•	•	•	•	•			•
S3054L3200			•	•	•	•	•	•	•	•							•
S4242B3150			•	•	•	•	•	•	•	•	•	•					•
S4242B3225			•	•	•	•	•	•	•	•	•	•	•	•	•		•
S4260B3200			•	•	•	•	•	•	•	•	•	•	•	•			•
S4260L3225			•	•	•	•	•	•	•	•							•
S5470L3225			•	•	•	•	•	•	•	•							•

Load Center Product Accessory Grid

ES Series – N3R, Three Phase

Catalog Number	Ground Bars and Lug Kits			Load Center Conversion Kits						Interlock Kits							
	EC1GB	EC2GB	EC3GB	ECLK3	ECLK1-2	ECLK2	ECLK2125	ECLK2225	ECLK3225	MBK3100	MBK3125	MBK3150	MBK3175	MBK3200	MBK3225	ECMLK3125	ECMLK3225
SW1224L3125		•			•	•	•			•						•	
SW1224L3200		•		•	•	•	•			•							•
SW1836L3150			•	•	•	•	•	•	•	•							•
SW2442B3150			•	•	•	•	•	•	•	•	•	•					•
SW2442L3150			•	•	•	•	•	•	•	•							•
SW2442L3200			•	•	•	•	•	•	•	•							•
SW3054B3200			•	•	•	•	•	•	•	•	•	•	•	•			•
SW3054L3200			•	•	•	•	•	•	•	•							•
SW4242B3225			•	•	•	•	•	•	•	•	•	•	•	•	•		•
SW4260B3200			•	•	•	•	•	•	•	•	•	•	•	•			•
SW4260L3225			•	•	•	•	•	•	•	•							•

Replacement Part Grid

1 Phase PN Series

Load Center Catalog Number	Replacement Trim Kit Catalog Number	Hinge Catalog Number	Door Latch Catalog Number	Trim Screw Catalog Number	Bond Screw Catalog Number	Directory Label Catalog Number
PN1212L1125C	RPNT1212L1125	ECLCHINGE	ECSIELATCH	ECTS2	ECBONDSCRW	ECADHLCDIRLBL
PN1212L1125CW	RPNT1212L1125W			ECTS2W	ECBONDSCRW	ECADHLCDIRLBL
PN1224B1100C	RPNT1224B1100	ECLCHINGE	ECSIELATCH	ECTS2	ECBONDSCRW	ECADHLCDIRLBL
PN1224B1100CW	RPNT1224B1100W			ECTS2W	ECBONDSCRW	ECADHLCDIRLBL
PN1224L1125C	RPNT1224L1125	ECLCHINGE	ECSIELATCH	ECTS2	ECBONDSCRW	ECADHLCDIRLBL
PN1224L1125CW	RPNT1224L1125W			ECTS2W	ECBONDSCRW	ECADHLCDIRLBL
PN1224L1200C	RPNT1224L1200	ECLCHINGE	ECSIELATCH	ECTS2	ECBONDSCRW	ECADHLCDIRLBL
PN1224L1200CW	RPNT1224L1200W			ECTS2W	ECBONDSCRW	ECADHLCDIRLBL
PN1632B1100C	RPNT1632B1100	ECLCHINGE	ECSIELATCH	ECTS2	ECBONDSCRW	ECADHLCDIRLBL
PN1632B1100CW	RPNT1632B1100W			ECTS2W	ECBONDSCRW	ECADHLCDIRLBL
PN1632L1125C	RPNT1632L1125	ECLCHINGE	ECSIELATCH	ECTS2	ECBONDSCRW	ECADHLCDIRLBL
PN1632L1125CW	RPNT1632L1125W			ECTS2W	ECBONDSCRW	ECADHLCDIRLBL
PN2020B1100C	RPNT2020B1100	ECLCHINGE	ECSIELATCH	ECTS2	ECBONDSCRW	ECADHLCDIRLBL
PN2020B1100CW	RPNT2020B1100W			ECTS2W	ECBONDSCRW	ECADHLCDIRLBL
PN2020L1125C	RPNT2020L1125	ECLCHINGE	ECSIELATCH	ECTS2	ECBONDSCRW	ECADHLCDIRLBL
PN2020L1125CW	RPNT2020L1125W			ECTS2W	ECBONDSCRW	ECADHLCDIRLBL
PN2040B1100C	RPNT2040B1100	ECLCHINGE	ECSIELATCH	ECTS2	ECBONDSCRW	ECADHLCDIRLBL
PN2040B1100CW	RPNT2040B1100W			ECTS2W	ECBONDSCRW	ECADHLCDIRLBL
PN2040B1150C	RPNT2040X1150	ECLCHINGE	ECSIELATCH	ECTS2	ECBONDSCRW	ECADHLCDIRLBL
PN2040B1150CW	RPNT2040X1150W			ECTS2W	ECBONDSCRW	ECADHLCDIRLBL
PN2040B1200C	RPNT2040X1200	ECLCHINGE	ECSIELATCH	ECTS2	ECBONDSCRW	ECADHLCDIRLBL
PN2040B1200CW	RPNT2040X1200W			ECTS2W	ECBONDSCRW	ECADHLCDIRLBL
PN2040L1125C	RPNT2040L1125	ECLCHINGE	ECSIELATCH	ECTS2	ECBONDSCRW	ECADHLCDIRLBL
PN2040L1125CW	RPNT2040L1125W			ECTS2W	ECBONDSCRW	ECADHLCDIRLBL
PN2040L1150C	RPNT2040X1150	ECLCHINGE	ECSIELATCH	ECTS2	ECBONDSCRW	ECADHLCDIRLBL
PN2040L1150CW	RPNT2040X1150W			ECTS2W	ECBONDSCRW	ECADHLCDIRLBL
PN2040L1200C	RPNT2040X1200	ECLCHINGE	ECSIELATCH	ECTS2	ECBONDSCRW	ECADHLCDIRLBL
PN2040L1200CW	RPNT2040X1200W			ECTS2W	ECBONDSCRW	ECADHLCDIRLBL
PN2424B1100C	RPNT2424B1100	ECLCHINGE	ECSIELATCH	ECTS2	ECBONDSCRW	ECADHLCDIRLBL
PN2424B1100CW	RPNT2424B1100W			ECTS2W	ECBONDSCRW	ECADHLCDIRLBL
PN2448L1125C	RPNT2448L1125	ECLCHINGE	ECSIELATCH	ECTS2	ECBONDSCRW	ECADHLCDIRLBL
PN2448L1125CW	RPNT2448L1125W			ECTS2W	ECBONDSCRW	ECADHLCDIRLBL
PN2448L1200C	RPNT2448L1200	ECLCHINGE	ECSIELATCH	ECTS2	ECBONDSCRW	ECADHLCDIRLBL
PN2448L1200CW	RPNT2448L1200W			ECTS2W	ECBONDSCRW	ECADHLCDIRLBL
PN3030B1100C	RPNT3030B1100	ECLCHINGE	ECSIELATCH	ECTS2	ECBONDSCRW	ECADHLCDIRLBL
PN3030B1100CW	RPNT3030B1100W			ECTS2W	ECBONDSCRW	ECADHLCDIRLBL
PN3030B1125C	RPNT3030B1125	ECLCHINGE	ECSIELATCH	ECTS2	ECBONDSCRW	ECADHLCDIRLBL
PN3030B1125CW	RPNT3030B1125W			ECTS2W	ECBONDSCRW	ECADHLCDIRLBL
PN3030B1150C	RPNT3030B1150	ECLCHINGE	ECSIELATCH	ECTS2	ECBONDSCRW	ECADHLCDIRLBL
PN3030B1150CW	RPNT3030B1150W			ECTS2W	ECBONDSCRW	ECADHLCDIRLBL

Replacement Part Grid

1 Phase PN Series (cont.)

Load Center Catalog Number	Replacement Trim Kit Catalog Number	Hinge Catalog Number	Door Latch Catalog Number	Trim Screw Catalog Number	Bond Screw Catalog Number	Directory Label Catalog Number
PN3030L1200C	RPNT3030L1200	ECLCHINGE	ECSIELATCH	ECTS2	ECBONDSCRW	ECADHLCDIRLBL
PN3030L1200CW	RPNT3030L1200W			ECTS2W	ECBONDSCRW	ECADHLCDIRLBL
PN3048B1200	RPNT3048X1200	ECLCHINGE	ECSIELATCH	ECTS2	ECBONDSCRW	ECADHLCDIRLBL
PN3048B1200C	RPNT3048X1200	ECLCHINGE	ECSIELATCH	ECTS2	ECBONDSCRW	ECADHLCDIRLBL
PN3048B1200CW	RPNT3048X1200W			ECTS2W	ECBONDSCRW	ECADHLCDIRLBL
PN3048B1200S14	RPNT3048B1200S	ECLCHINGE	ECSIELATCH	ECTS2	ECBONDSCRW	ECADHLCDIRLBL
PN3048B1200W	RPNT304X1200W			ECTS2W	ECBONDSCRW	ECADHLCDIRLBL
PN3048L1125C	RPNT3048L1125	ECLCHINGE	ECSIELATCH	ECTS2	ECBONDSCRW	ECADHLCDIRLBL
PN3048L1125CW	RPNT3048L1125W			ECTS2W	ECBONDSCRW	ECADHLCDIRLBL
PN3048L1200	RPNT3048X1200	ECLCHINGE	ECSIELATCH	ECTS2	ECBONDSCRW	ECADHLCDIRLBL
PN3048L1200C	RPNT3048X1200	ECLCHINGE	ECSIELATCH	ECTS2	ECBONDSCRW	ECADHLCDIRLBL
PN3048L1200CW	RPNT3048X1200			ECTS2W	ECBONDSCRW	ECADHLCDIRLBL
PN3048L1200W	RPNT3048X1200W			ECTS2W	ECBONDSCRW	ECADHLCDIRLBL
PN4040B1200	RPNT4040X1200	ECLCHINGE	ECSIELATCH	ECTS2	ECBONDSCRW	ECADHLCDIRLBL
PN4040B1200C	RPNT4040X1200	ECLCHINGE	ECSIELATCH	ECTS2	ECBONDSCRW	ECADHLCDIRLBL
PN4040B1200CW	RPNT4040X1200W			ECTS2W	ECBONDSCRW	ECADHLCDIRLBL
PN4040B1200W	RPNT4040X1200W			ECTS2W	ECBONDSCRW	ECADHLCDIRLBL
PN4040L1125C	RPNT4040L1125C	ECLCHINGE	ECSIELATCH	ECTS2	ECBONDSCRW	ECADHLCDIRLBL
PN4040L1125CW	RPNT4040L1125W			ECTS2W	ECBONDSCRW	ECADHLCDIRLBL
PN4040L1200	RPNT4040X1200	ECLCHINGE	ECSIELATCH	ECTS2	ECBONDSCRW	ECADHLCDIRLBL
PN4040L1200C	RPNT4040X1200	ECLCHINGE	ECSIELATCH	ECTS2	ECBONDSCRW	ECADHLCDIRLBL
PN4040L1200CW	RPNT4040X1200W			ECTS2W	ECBONDSCRW	ECADHLCDIRLBL
PN4040L1200W	RPNT4040X1200W			ECTS2W	ECBONDSCRW	ECADHLCDIRLBL
PN4060B1200	RPNT4040X1200	ECLCHINGE	ECSIELATCH	ECTS2	ECBONDSCRW	ECADHLCDIRLBL
PN4060B1200C	RPNT4040X1200	ECLCHINGE	ECSIELATCH	ECTS2	ECBONDSCRW	ECADHLCDIRLBL
PN4060B1200CW	RPNT4040X1200W			ECTS2W	ECBONDSCRW	ECADHLCDIRLBL
PN4060B1200S14	RPNT4060B1200S	ECLCHINGE	ECSIELATCH	ECTS2	ECBONDSCRW	ECADHLCDIRLBL
PN4060B1200W	RPNT4040X1200W			ECTS2W	ECBONDSCRW	ECADHLCDIRLBL
PN4060L1200C	RPNT4060X1200	ECLCHINGE	ECSIELATCH	ECTS2	ECBONDSCRW	ECADHLCDIRLBL
PN4060L1200CW	RPNT4060X1200W			ECTS2W	ECBONDSCRW	ECADHLCDIRLBL
PN4264B1225C	RPNT4264X1225	ECLCHINGE	ECSIELATCH	ECTS2	ECBONDSCRW	ECADHLCDIRLBL
PN4264B1225CW	RPNT4264X1225W			ECTS2W	ECBONDSCRW	ECADHLCDIRLBL
PN4264L1225C	RPNT4264X1225	ECLCHINGE	ECSIELATCH	ECTS2	ECBONDSCRW	ECADHLCDIRLBL
PN4264L1225CW	RPNT4264X1225W			ECTS2W	ECBONDSCRW	ECADHLCDIRLBL
PN5482B1200C	RPNT5482B1200	ECLCHINGE	ECSIELATCH	ECTS2	ECBONDSCRW	ECADHLCDIRLBL
PN5482B1200CW	RPNT5482B1200W			ECTS2W	ECBONDSCRW	ECADHLCDIRLBL
PN5482B1225C	RPNT5482X1225	ECLCHINGE	ECSIELATCH	ECTS2	ECBONDSCRW	ECADHLCDIRLBL
PN5482B1225CW	RPNT5482X1225W			ECTS2W	ECBONDSCRW	ECADHLCDIRLBL
PN5482L1225C	RPNT5482X1225	ECLCHINGE	ECSIELATCH	ECTS2	ECBONDSCRW	ECADHLCDIRLBL
PN5482L1225CW	RPNT5482X1225W			ECTS2W	ECBONDSCRW	ECADHLCDIRLBL

Replacement Part Grid

1 Phase SN Series

Load Center Catalog Number	Replacement Trim Kit Catalog Number	Hinge Catalog Number	Door Latch Catalog Number	Trim Screw Catalog Number	Bond Screw Catalog Number	Directory Label Catalog Number
SN1212L1125	RSNT1212L1125	ECLCHINGE	ECSIELATCH	ECTS2	ECBONDSCRW	ECADHLCDIRLBL
SN1212L1125W	RSNT1212L1125W			ECTS2W	ECBONDSCRW	ECADHLCDIRLBL
SN1224B1100	RSNT1224B1100	ECLCHINGE	ECSIELATCH	ECTS2	ECBONDSCRW	ECADHLCDIRLBL
SN1224B1100W	RSNT1224B1100W			ECTS2W	ECBONDSCRW	ECADHLCDIRLBL
SN1224L1125	RSNT1224L1125	ECLCHINGE	ECSIELATCH	ECTS2	ECBONDSCRW	ECADHLCDIRLBL
SN1224L1125W	RSNT1224L1125W			ECTS2W	ECBONDSCRW	ECADHLCDIRLBL
SN1224L1200	RSNT1224L1200	ECLCHINGE	ECSIELATCH	ECTS2	ECBONDSCRW	ECADHLCDIRLBL
SN1224L1200W	RSNT1224L1200W			ECTS2W	ECBONDSCRW	ECADHLCDIRLBL
SN1632B1100	RSNT1632B1100	ECLCHINGE	ECSIELATCH	ECTS2	ECBONDSCRW	ECADHLCDIRLBL
SN1632B1100W	RSNT1632B1100W			ECTS2W	ECBONDSCRW	ECADHLCDIRLBL
SN1632B1125	RSNT1632B1125	ECLCHINGE	ECSIELATCH	ECTS2	ECBONDSCRW	ECADHLCDIRLBL
SN1632B1125W	RSNT1632B1125W			ECTS2W	ECBONDSCRW	ECADHLCDIRLBL
SN1632B1150	RSNT1632B1150	ECLCHINGE	ECSIELATCH	ECTS2	ECBONDSCRW	ECADHLCDIRLBL
SN1632B1150W	RSNT1632B1150W			ECTS2W	ECBONDSCRW	ECADHLCDIRLBL
SN1632B1200	RSNT1632B1200	ECLCHINGE	ECSIELATCH	ECTS2	ECBONDSCRW	ECADHLCDIRLBL
SN1632B1200W	RSNT1632B1200W			ECTS2W	ECBONDSCRW	ECADHLCDIRLBL
SN1632L1125	RSNT1632L1125	ECLCHINGE	ECSIELATCH	ECTS2	ECBONDSCRW	ECADHLCDIRLBL
SN1632L1125W	RSNT1632L1125W			ECTS2W	ECBONDSCRW	ECADHLCDIRLBL
SN1632L1150	RSNT1632L1150	ECLCHINGE	ECSIELATCH	ECTS2	ECBONDSCRW	ECADHLCDIRLBL
SN1632L1150W	RSNT1632L1150W			ECTS2W	ECBONDSCRW	ECADHLCDIRLBL
SN2020B1100	RSNT2020B1100	ECLCHINGE	ECSIELATCH	ECTS2	ECBONDSCRW	ECADHLCDIRLBL
SN2020B1100W	RSNT2020B1100W			ECTS2W	ECBONDSCRW	ECADHLCDIRLBL
SN2020L1125	RSNT2020L1125	ECLCHINGE	ECSIELATCH	ECTS2	ECBONDSCRW	ECADHLCDIRLBL
SN2020L1125W	RSNT2020L1125W			ECTS2W	ECBONDSCRW	ECADHLCDIRLBL
SN2040B1100	RSNT2040B1100	ECLCHINGE	ECSIELATCH	ECTS2	ECBONDSCRW	ECADHLCDIRLBL
SN2040B1100W	RSNT2040B1100W			ECTS2W	ECBONDSCRW	ECADHLCDIRLBL
SN2040B1150	RSNT2040B1150	ECLCHINGE	ECSIELATCH	ECTS2	ECBONDSCRW	ECADHLCDIRLBL
SN2040B1150W	RSNT2040B1150W			ECTS2W	ECBONDSCRW	ECADHLCDIRLBL
SN2040B1200	RSNT2040B1200	ECLCHINGE	ECSIELATCH	ECTS2	ECBONDSCRW	ECADHLCDIRLBL
SN2040B1200W	RSNT2040B1200W			ECTS2W	ECBONDSCRW	ECADHLCDIRLBL
SN2040C1200	RSNT2040C1200	ECLCHINGE	ECSIELATCH	ECTS2	ECBONDSCRW	ECADHLCDIRLBL
SN2040L1125	RSNT2040L1125	ECLCHINGE	ECSIELATCH	ECTS2	ECBONDSCRW	ECADHLCDIRLBL
SN2040L1125W	RSNT2040L1125W			ECTS2W	ECBONDSCRW	ECADHLCDIRLBL
SN2040L1150	RSNT2040L1150	ECLCHINGE	ECSIELATCH	ECTS2	ECBONDSCRW	ECADHLCDIRLBL
SN2040L1150W	RSNT2040L1150W			ECTS2W	ECBONDSCRW	ECADHLCDIRLBL
SN2040L1200	RSNT2040L1200	ECLCHINGE	ECSIELATCH	ECTS2	ECBONDSCRW	ECADHLCDIRLBL
SN2040L1200W	RSNT2040L1200W			ECTS2W	ECBONDSCRW	ECADHLCDIRLBL
SN2424B1125	RSNT2424B1125	ECLCHINGE	ECSIELATCH	ECTS2	ECBONDSCRW	ECADHLCDIRLBL
SN2424B1125W	RSNT2424B1125W			ECTS2W	ECBONDSCRW	ECADHLCDIRLBL
SN2424C1125	RSNT2424C1125	ECLCHINGE	ECSIELATCH	ECTS2	ECBONDSCRW	ECADHLCDIRLBL
SN2424L1125	RSNT2424L1125	ECLCHINGE	ECSIELATCH	ECTS2	ECBONDSCRW	ECADHLCDIRLBL

Replacement Part Grid

1 Phase SN Series (cont.)

Load Center Catalog Number	Replacement Trim Kit Catalog Number	Hinge Catalog Number	Door Latch Catalog Number	Trim Screw Catalog Number	Bond Screw Catalog Number	Directory Label Catalog Number
SN2424L1125W	RSNT2424L1125W			ECTS2W	ECBONDSCRW	ECADHLCDIRLBL
SN2448B1100	RSNT2448B1100	ECLCHINGE	ECSIELATCH	ECTS2	ECBONDSCRW	ECADHLCDIRLBL
SN2448B1100W	RSNT2448B1100W			ECTS2W	ECBONDSCRW	ECADHLCDIRLBL
SN2448B1150	RSNT2448B1150	ECLCHINGE	ECSIELATCH	ECTS2	ECBONDSCRW	ECADHLCDIRLBL
SN2448B1150W	RSNT2448B1150W			ECTS2W	ECBONDSCRW	ECADHLCDIRLBL
SN2448B1200	RSNT2448B1200	ECLCHINGE	ECSIELATCH	ECTS2	ECBONDSCRW	ECADHLCDIRLBL
SN2448B1200W	RSNT2448B1200W			ECTS2W	ECBONDSCRW	ECADHLCDIRLBL
SN2448L1125	RSNT2448L1125	ECLCHINGE	ECSIELATCH	ECTS2	ECBONDSCRW	ECADHLCDIRLBL
SN2448L1125W	RSNT2448L1125W			ECTS2W	ECBONDSCRW	ECADHLCDIRLBL
SN2448L1150	RSNT2448L1150	ECLCHINGE	ECSIELATCH	ECTS2	ECBONDSCRW	ECADHLCDIRLBL
SN2448L1150W	RSNT2448L1150W			ECTS2W	ECBONDSCRW	ECADHLCDIRLBL
SN2448L1200	RSNT2448L1200	ECLCHINGE	ECSIELATCH	ECTS2	ECBONDSCRW	ECADHLCDIRLBL
SN2448L1200W	RSNT2448L1200W			ECTS2W	ECBONDSCRW	ECADHLCDIRLBL
SN3030B1100	RSNT3030B1100	ECLCHINGE	ECSIELATCH	ECTS2	ECBONDSCRW	ECADHLCDIRLBL
SN3030B1100W	RSNT3030B1100W			ECTS2W	ECBONDSCRW	ECADHLCDIRLBL
SN3030B1125	RSNT3030B1125	ECLCHINGE	ECSIELATCH	ECTS2	ECBONDSCRW	ECADHLCDIRLBL
SN3030B1125W	RSNT3030B1125W			ECTS2W	ECBONDSCRW	ECADHLCDIRLBL
SN3030B1150	RSNT3030B1150	ECLCHINGE	ECSIELATCH	ECTS2	ECBONDSCRW	ECADHLCDIRLBL
SN3030B1150W	RSNT3030B1150W			ECTS2W	ECBONDSCRW	ECADHLCDIRLBL
SN3030L1200	RSNT3030L1200	ECLCHINGE	ECSIELATCH	ECTS2	ECBONDSCRW	ECADHLCDIRLBL
SN3030L1200W	RSNT3030L1200W			ECTS2W	ECBONDSCRW	ECADHLCDIRLBL
SN3048B1100	RSNT3048B1100	ECLCHINGE	ECSIELATCH	ECTS2	ECBONDSCRW	ECADHLCDIRLBL
SN3048B1100W	RSNT3048B1100W			ECTS2W	ECBONDSCRW	ECADHLCDIRLBL
SN3048B1125	RSNT3048B1125	ECLCHINGE	ECSIELATCH	ECTS2	ECBONDSCRW	ECADHLCDIRLBL
SN3048B1125W	RSNT3048B1125W			ECTS2W	ECBONDSCRW	ECADHLCDIRLBL
SN3048B1150	RSNT3048B1150	ECLCHINGE	ECSIELATCH	ECTS2	ECBONDSCRW	ECADHLCDIRLBL
SN3048B1150W	RSNT3048B1150W			ECTS2W	ECBONDSCRW	ECADHLCDIRLBL
SN3048B1200	RSNT3048B1200	ECLCHINGE	ECSIELATCH	ECTS2	ECBONDSCRW	ECADHLCDIRLBL
SN3048B1200S06	RSNT3048B1200S06	ECLCHINGE	ECSIELATCH	ECTS2	ECBONDSCRW	ECADHLCDIRLBL
SN3048B1200W	RSNT3048B1200W			ECTS2W	ECBONDSCRW	ECADHLCDIRLBL
SN3048C1200	RSNT3048C1200	ECLCHINGE	ECSIELATCH	ECTS2	ECBONDSCRW	ECADHLCDIRLBL
SN3048L1125	RSNT3048L1125	ECLCHINGE	ECSIELATCH	ECTS2	ECBONDSCRW	ECADHLCDIRLBL
SN3048L1125W	RSNT3048L1125W			ECTS2W	ECBONDSCRW	ECADHLCDIRLBL
SN3048L1200	RSNT3048L1200	ECLCHINGE	ECSIELATCH	ECTS2	ECBONDSCRW	ECADHLCDIRLBL
SN3048L1200L50	RSNT3048L1200L50	ECLCHINGE	ECSIELATCH	ECTS2	ECBONDSCRW	ECADHLCDIRLBL
SN3048L1200L5W	RSNT3048L1200L5W			ECTS2W	ECBONDSCRW	ECADHLCDIRLBL
SN3048L1200W	RSNT3048L1200W			ECTS2W	ECBONDSCRW	ECADHLCDIRLBL
SN4040B1200	RSNT4040B1200	ECLCHINGE	ECSIELATCH	ECTS2	ECBONDSCRW	ECADHLCDIRLBL
SN4040B1200W	RSNT4040B1200W			ECTS2W	ECBONDSCRW	ECADHLCDIRLBL
SN4040C1200	RSNT4040C1200	ECLCHINGE	ECSIELATCH	ECTS2	ECBONDSCRW	ECADHLCDIRLBL
SN4040L1125	RSNT4040L1125	ECLCHINGE	ECSIELATCH	ECTS2	ECBONDSCRW	ECADHLCDIRLBL

Replacement Part Grid

1 Phase SN Series (cont.)

Load Center Catalog Number	Replacement Trim Kit Catalog Number	Hinge Catalog Number	Door Latch Catalog Number	Trim Screw Catalog Number	Bond Screw Catalog Number	Directory Label Catalog Number
SN4040L1125W	RSNT4040L1125W			ECTS2W	ECBONDSCRW	ECADHLCDIRLBL
SN4040L1200	RSNT4040L1200	ECLCHINGE	ECSIELATCH	ECTS2	ECBONDSCRW	ECADHLCDIRLBL
SN4040L1200W	RSNT4040L1200W			ECTS2W	ECBONDSCRW	ECADHLCDIRLBL
SN4060B1200	RSNT4060B1200	ECLCHINGE	ECSIELATCH	ECTS2	ECBONDSCRW	ECADHLCDIRLBL
SN4060B1200S06	RSNT4060B1200S06	ECLCHINGE	ECSIELATCH	ECTS2	ECBONDSCRW	ECADHLCDIRLBL
SN4060B1200W	RSNT4060B1200W			ECTS2W	ECBONDSCRW	ECADHLCDIRLBL
SN4060L1225	RSNT4060L1225	ECLCHINGE	ECSIELATCH	ECTS2	ECBONDSCRW	ECADHLCDIRLBL
SN4060L1225W	RSNT4060L1225W			ECTS2W	ECBONDSCRW	ECADHLCDIRLBL
SN4264B1200	RSNT4264B1200	ECLCHINGE	ECSIELATCH	ECTS2	ECBONDSCRW	ECADHLCDIRLBL
SN4264B1200W	RSNT4264B1200W			ECTS2W	ECBONDSCRW	ECADHLCDIRLBL
SN4264B1225	RSNT4264B1225	ECLCHINGE	ECSIELATCH	ECTS2	ECBONDSCRW	ECADHLCDIRLBL
SN4264B1225W	RSNT4264B1225W			ECTS2W	ECBONDSCRW	ECADHLCDIRLBL
SN4264L1225	RSNT4264L1225	ECLCHINGE	ECSIELATCH	ECTS2	ECBONDSCRW	ECADHLCDIRLBL
SN4264L1225W	RSNT4264L1225W			ECTS2W	ECBONDSCRW	ECADHLCDIRLBL
SN5482B1200	RSNT5482B1200	ECLCHINGE	ECSIELATCH	ECTS2	ECBONDSCRW	ECADHLCDIRLBL
SN5482B1200W	RSNT5482B1200W			ECTS2W	ECBONDSCRW	ECADHLCDIRLBL
SN5482B1225	RSNT5482B1225	ECLCHINGE	ECSIELATCH	ECTS2	ECBONDSCRW	ECADHLCDIRLBL
SN5482B1225W	RSNT5482B1225W			ECTS2W	ECBONDSCRW	ECADHLCDIRLBL
SN5482L1225	RSNT5482L1225	ECLCHINGE	ECSIELATCH	ECTS2	ECBONDSCRW	ECADHLCDIRLBL
SN5482L1225W	RSNT5482L1225W			ECTS2W	ECBONDSCRW	ECADHLCDIRLBL

Replacement Part Grid

3 Phase PL & ES Series

Load Center Catalog Number	Replacement Trim Kit Catalog Number	Hinge Catalog Number	Door Latch Catalog Number	Trim Screw Catalog Number	Bond Screw Catalog Number	Directory Label Catalog Number
P1224B3100CU	RPT1224B3100	ECLCHINGE	ECSIELATCH	ECTS2	ECBONDSCRW	ECADHLCDIRLBL
P1224L3125CU	RPT1224L3125	ECLCHINGE	ECSIELATCH	ECTS2	ECBONDSCRW	ECADHLCDIRLBL
P2442B3150CU	RPT2442X3150	ECLCHINGE	ECSIELATCH	ECTS2	ECBONDSCRW	ECADHLCDIRLBL
P2442L3200CU	RPT2442X3200	ECLCHINGE	ECSIELATCH	ECTS2	ECBONDSCRW	ECADHLCDIRLBL
P3030B3125CU	RPT3030X2125	ECLCHINGE	ECSIELATCH	ECTS2	ECBONDSCRW	ECADHLCDIRLBL
P3042B3100CU	RPT3042B3100	ECLCHINGE	ECSIELATCH	ECTS2	ECBONDSCRW	ECADHLCDIRLBL
P3054B3200CU	RPT3054X3200	ECLCHINGE	ECSIELATCH	ECTS2	ECBONDSCRW	ECADHLCDIRLBL
P3054L3200CU	RPT3054X3200	ECLCHINGE	ECSIELATCH	ECTS2	ECBONDSCRW	ECADHLCDIRLBL
P4242B3150CU	RPT4242X3150	ECLCHINGE	ECSIELATCH	ECTS2	ECBONDSCRW	ECADHLCDIRLBL
P4260B3200CU	RPT4260X3200	ECLCHINGE	ECSIELATCH	ECTS2	ECBONDSCRW	ECADHLCDIRLBL
P4260B3200CUW	RPT5470X1200W	ECLCHINGE	ECSIELATCH	ECTS2W	ECBONDSCRW	ECADHLCDIRLBL
P4260B3225CU	RPT4260X3225	ECLCHINGE	ECSIELATCH	ECTS2	ECBONDSCRW	ECADHLCDIRLBL
P4260B3225TCU	RPT4260B3225T	ECLCHINGE	ECSIELATCH	ECTS2	ECBONDSCRW	ECADHLCDIRLBL
P4260L3225CU	RPT4260X3225	ECLCHINGE	ECSIELATCH	ECTS2	ECBONDSCRW	ECADHLCDIRLBL
P5470B3225CU	RPT5470X3225	ECLCHINGE	ECSIELATCH	ECTS2	ECBONDSCRW	ECADHLCDIRLBL
P5470L3225CU	RPT5470X3225	ECLCHINGE	ECSIELATCH	ECTS2	ECBONDSCRW	ECADHLCDIRLBL
S1224B3100	RST1224B3100	ECLCHINGE	ECSIELATCH	ECTS2	ECBONDSCRW	ECADHLCDIRLBL
S1224L3125	RST1224L3125	ECLCHINGE	ECSIELATCH	ECTS2	ECBONDSCRW	ECADHLCDIRLBL
S1224L3200	RST1224L3200	ECLCHINGE	ECSIELATCH	ECTS2	ECBONDSCRW	ECADHLCDIRLBL
S1836L3150	RST1836L3150	ECLCHINGE	ECSIELATCH	ECTS2	ECBONDSCRW	ECADHLCDIRLBL
S2442B3150	RST2442B3150	ECLCHINGE	ECSIELATCH	ECTS2	ECBONDSCRW	ECADHLCDIRLBL
S2442L3150	RST2442L3150	ECLCHINGE	ECSIELATCH	ECTS2	ECBONDSCRW	ECADHLCDIRLBL
S2442L3200	RST2442L3200	ECLCHINGE	ECSIELATCH	ECTS2	ECBONDSCRW	ECADHLCDIRLBL
S3030B3100	RST3030B3100	ECLCHINGE	ECSIELATCH	ECTS2	ECBONDSCRW	ECADHLCDIRLBL
S3042B3100	RST3042B3100	ECLCHINGE	ECSIELATCH	ECTS2	ECBONDSCRW	ECADHLCDIRLBL
S3054B3200	RST3054B3200	ECLCHINGE	ECSIELATCH	ECTS2	ECBONDSCRW	ECADHLCDIRLBL
S3054L3200	RST3054L3200	ECLCHINGE	ECSIELATCH	ECTS2	ECBONDSCRW	ECADHLCDIRLBL
S3054L3200W	RST3054L3200W	ECLCHINGE	ECSIELATCH	ECTS2W	ECBONDSCRW	ECADHLCDIRLBL
S4242B3150	RST4242B3150	ECLCHINGE	ECSIELATCH	ECTS2	ECBONDSCRW	ECADHLCDIRLBL
S4242B3225	RST4242B3225	ECLCHINGE	ECSIELATCH	ECTS2	ECBONDSCRW	ECADHLCDIRLBL
S4260B3200	RST4260B3200	ECLCHINGE	ECSIELATCH	ECTS2	ECBONDSCRW	ECADHLCDIRLBL
S4260L3225	RST4260L3225	ECLCHINGE	ECSIELATCH	ECTS2	ECBONDSCRW	ECADHLCDIRLBL
S4260L3225W	RST4260L3225W	ECLCHINGE	ECSIELATCH	ECTS2W	ECBONDSCRW	ECADHLCDIRLBL
S5470L3225	RST5470L3225	ECLCHINGE	ECSIELATCH	ECTS2	ECBONDSCRW	ECADHLCDIRLBL
S5470L3225W	RST5470L3225W	ECLCHINGE	ECSIELATCH	ECTS2W	ECBONDSCRW	ECADHLCDIRLBL

Notes:

Notes:

Published by
Siemens 2021

Siemens Industry, Inc.
3617 Parkway Ln
Peachtree Corners, GA 30092

Siemens Technical Support: 1-800-333-7421
info.us@siemens.com

Order No.RPBR-LCARP-0421

Printed in USA-CP
All Rights Reserved
© 2021, Siemens Industry, Inc.

The technical data presented in this document is based on an actual case or on as-designed parameters, and therefore should not be relied upon for any specific application and does not constitute a performance guarantee for any projects. Actual results are dependent on variable conditions. Accordingly, Siemens does not make representations, warranties, or assurances as to the accuracy, currency or completeness of the content contained herein. If requested, we will provide specific technical data or specifications with respect to any customer's particular applications. Our company is constantly involved in engineering and development. For that reason, we reserve the right to modify, at any time, the technology and product specifications contained herein.