ASC Engineered Solutions

Class 150 (Standard)
Fig. 3101R Reducing 90˚ Elbow

c UL us LISTED FM APPROVED

For Listings/Approval Details and Limitations, visit our website at www.asc-es.com or contact an ASC Engineered Solutions™ Sales Representative.

Figure 3101R Reducing 90˚ Elbow

Nominal Size	Dimensions A	Dimensions B	Approx Wt. Each	Nominal Size	Dimensions A	Dimensions B	Approx Wt. Each
In. (mm)	In. (mm)	In. (mm)	Lbs. (kg)	In. (mm)	In. (mm)	In. (mm)	Lbs. (kg)
¼ x ⅛ 8 x 6	0.74 18.80	0.76 19.3	0.08 0.04	1½ x ¾ 40 x 20	1.52 38.61	1.75 44.45	0.74 0.34
⅜ x ⅛ 10 x 6	0.81 20.57	0.85 21.59	0.11 0.05	1½ x 1 40 x 25	1.65 41.91	1.80 45.72	0.88 0.40
⅜ x ¼ 10 x 8	0.88 22.35	0.90 22.86	0.13 0.06	1½ x 1¼ 40 x 32	1.82 46.23	1.88 47.75	1.03 0.47
½ x ¼ 15 x 8	0.97 24.64	0.98 24.89	0.16 0.07	2 x ½ 50 x 15	1.50 38.10	1.89 48.01	0.93 0.42
½ x ⅜ 15 x 10	1.04 26.42	1.03 26.16	0.19 0.09	2 x ¾ 50 x 20	1.60 40.64	1.97 50.04	1.04 0.47
¾ x ⅜ 20 x 10	1.12 28.45	1.13 28.70	0.26 0.12	2 x 1 50 x 25	1.73 43.94	2.02 51.31	1.28 0.58
¾ x ½ 20 x 15	1.20 30.48	1.22 30.99	0.29 0.13	2 x 1¼ 50 x 32	1.90 48.26	2.10 53.34	1.36 0.62
1 x ⅜ 25 x 10	1.18 29.97	1.26 32.00	0.35 0.16	2 x 1½ 50 x 40	2.02 51.31	2.16 54.86	1.51 0.68
1 x ½ 25 x 15	1.26 32.00	1.36 34.54	0.42 0.19	2½ x 1½ 65 x 40	2.16 54.86	2.51 63.75	2.20 1.00
1 x ¾ 25 x 20	1.37 34.80	1.45 36.83	0.47 0.21	2½ x 2 65 x 50	2.39 60.71	2.60 66.04	2.55 1.16
1¼ x ½ 32 x 15	1.34 34.04	1.53 38.86	0.54 0.24	3 x 2 80 x 50	2.52 64.01	2.89 73.41	3.35 1.52
1¼ x ¾ 32 x 20	1.45 36.83	1.62 41.15	0.62 0.28	3 x 2½ 80 x 65	2.83 71.88	2.99 75.95	4.12 1.87
1¼ x 1 32 x 25	1.58 40.13	1.67 42.42	0.73 0.33	4 x 2 100 x 50	2.72 69.09	3.43 87.12	5.01 2.27
1½ x ½ 40 x 15	1.38 35.05	1.65 41.91	0.65 0.29	4 x 3 100 x 80	3.30 83.82	3.60 91.44	6.65 3.02

Material Specifications

Dimensions:
Fittings: ASME B16.3
Unions: ASME B16.39
Bushings/Plugs: ASME B16.14

Material: ASTM A-197

Finish: Black or Hot Dip Galvanized per ASTM A153 Class A

Threads*: NPT per ASME B1.20.1

Pressure Ratings:
Fittings: ASME B16.3
Unions: ASME B16.39
Bushings/Plugs: ASME B16.14

Pressure Testing: All malleable iron fittings are tested for through wall porosity using an air under water process.

Agency Approvals: All malleable iron fittings and unions are UL/ULC Listed and FM Approved.

*British Standard threading per BS 21 available upon request.

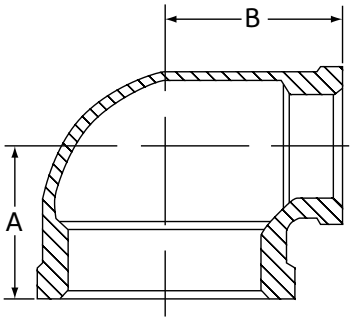

SCI An ASC Engineered Solution

PROJECT INFORMATION	APPROVAL STAMP
Project:	☐ Approved
Address:	☐ Approved as noted
Contractor:	☐ Not approved
Engineer:	Remarks:
Submittal Date:	
Notes 1:	
Notes 2:	