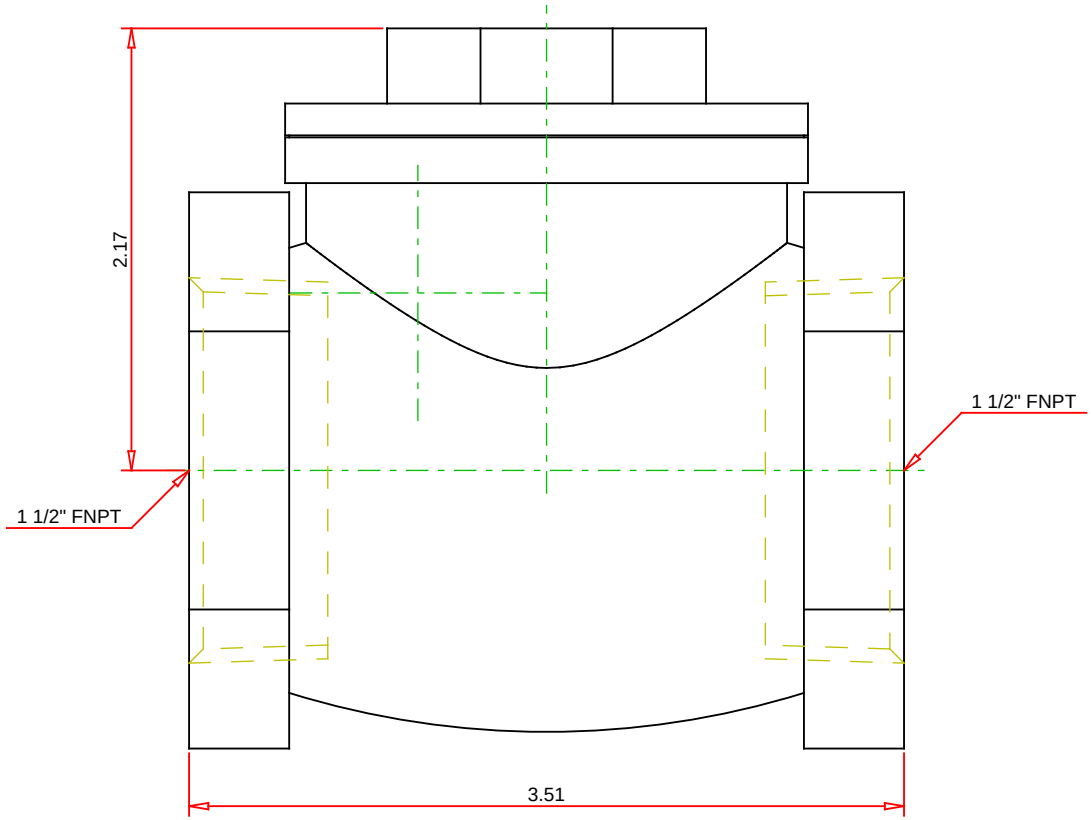

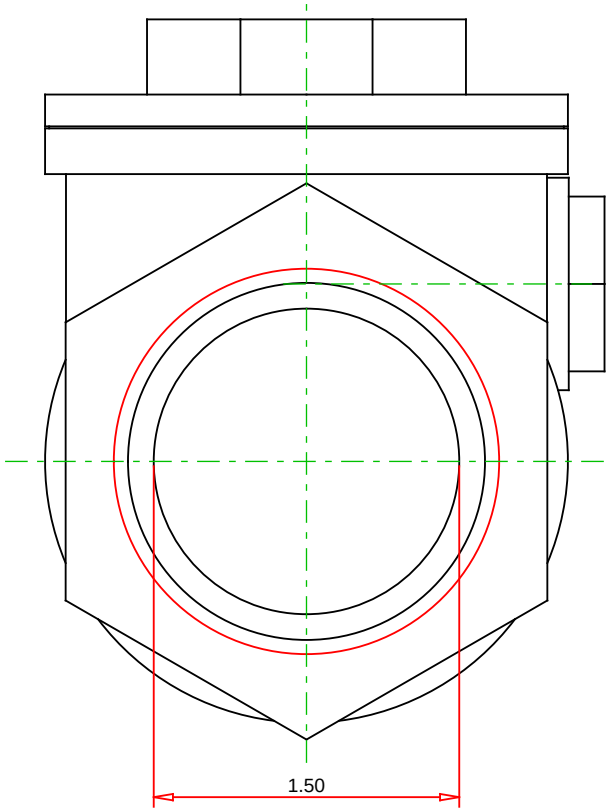

Note :
- Drawing is not to Scale.
- Dimensions are subject to change.
- All dimensions are in Inches and are for Reference Only.

Part Name:
1 1/2-9191L-TE

Product No:
4347002850

Description:
9191L 1-1/2 BRASS SWING CHECK VLV TE 200CWP NSF NL

ASC Engineered Solutions

Email: marketing@asc-es.com

Website: https://www.asc-es.com/

Date: 13-SEP-2022