canplas PLUMBING

Submittal Sheet

Part Description:

2"X 1-1/2"X 2" PVC WHITE DWV Sanitary Tee H X H X H

Part Number:

192127L

Approvals and Listings maintained by:
Canplas Industries Ltd
Canada: 1-800-461-5300 USA: 1-888-461-5307

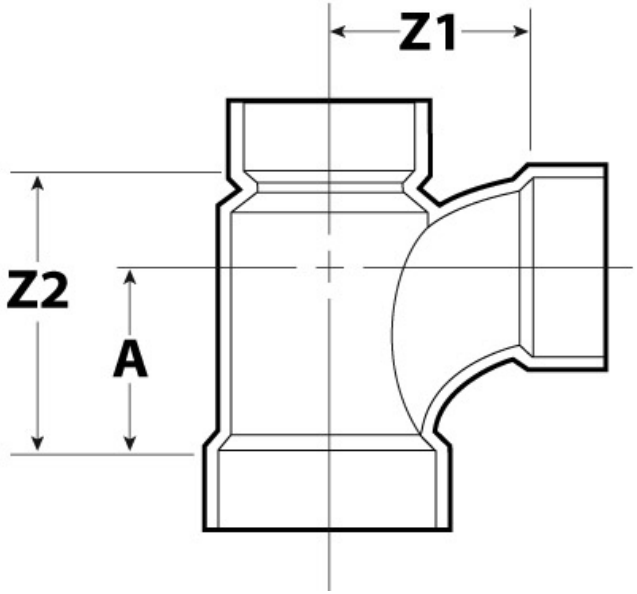

Part #	Part UPC	Colour	Size (inches)	Ctn Qty	Ctn Bar Code	Ctn. Wt (Kgs)	Ctn. Wt (lbs)	Skid Cubic (m)	Skid Cubic (ft)	Ctns/Skid
192127L	662671191212	WHITE	2X1-1/2X2	25	10662671191219	5.37	11.81	1.79	63.37	48

Dimensions (inches)

A	Z1	Z2
2.30	2.21	3.66