TELLIUM HEAD

TECH LIGHTING

PRODUCT FEATURES

- High-tech display head that combines simplicity with practical technology
- Precise light beam that directs light where you want it
- Available in modern finishes
- Compatible with the Monorail and Monopoint systems by Tech Lighting
- Lamping options are compatible with most dimmers
- Protected by a 1-year warranty. please visit the “About Us” Page on techlighting.com for more for warranty details

White

LAMPING

Lamp not Included. Rated for 50 watt max. halogen MR16 see pg. 591 of the Tech FL catalog for LED MR16 lamping options. Dimmable with Low-Voltage electronic or magnetic dimmer (based on transformer).

Aged Brass | Satin Nickel | Antique Bronze | White

ORDERING INFORMATION

700	SYSTEM	TLM	LENGTH (A)	FINISH	LAMP
	FJ FREEJACK		**03** 3"	**R** AGED BRASS	NO LAMP
	MP MONOPOINT		**06** 6"	**Z** ANTIQUE BRONZE	NO LAMP
	MO MONORAIL		**12** 12"	**S** SATIN NICKEL	
				W WHITE	

Note. MP includes 4" Round Flush Canopy. For custom stem lengths, please contact the Quotes Department. White finish option ships with Satin Nicekl system connector.

700 _____ TLM _____ _____ _____

JOB NAME _____

NOTES _____

© 2019 Tech Lighting, L.L.C. All rights reserved. The “Tech Lighting” graphic is a registered trademark of Tech Lighting, L.L.C. Tech Lighting reserves the right to change specifications for product improvements without notification.

7400 Linder Avenue, Skokie, IL 60077
T 847.410.4400 | F 847.410.4500 | techlighting.com

TELLIUM HEAD

TECH LIGHTING

SPECIFICATIONS

HARDWARE MATERIAL	Metal
SHADE MATERIAL	Metal
NET WEIGHT	1.03 lbs
HEIGHT	2.3in
WIDTH	3.8in
LENGTH	2.3in
BEAM SPREAD	
UP LIGHT / DOWN LIGHT / BOTH?	
WET LISTED	
DAMP LISTED	
DRY LISTED	Yes
MIN. HANGING HEIGHT	3in
MAX HANGING HEIGHT	3in
TOTAL CORD LENGTH	
SLOPED CEILING ADAPTABLE?	No
GENERAL LISTING	ETL Listed
INCLUDES	

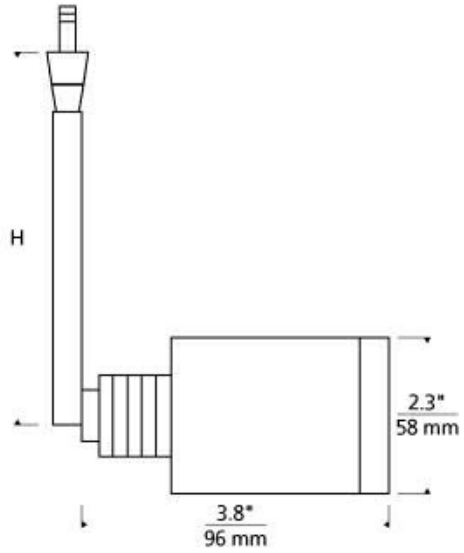

LAMPING SPECIFICATIONS

	LED LAMP	INTEGRATED LED	NON LED	NO LAMP
DELIVERED LUMENS				
WATTS			50	
MAX WATTAGE PER BULB			50W	
INPUT VOLTAGE			12V 120V	
DIMMING TYPE*			ELV	
CCT				
CRI				
LED LIFETIME				
L70				
AVERAGE BULB HOURS				
FIELD SERVICEABLE LED				
LAMP BASE			Bi-Pin	
LAMP SHAPE			A21	
LAMP INCLUDED?				
WARRANTY**			1 Year	

* Dimming information available at www.techlighting.com/Downloads#dimming
** Visit techlighting.com for specific warranty limitations and details.

T20 / T24 / JA8 INFORMATION

	Integrated LED	Replacement LED Lamp	No Lamp *
This product can be used to comply with California Building Energy Efficiency Standards 2016 **Title 24** Part 6 / **JA8**.			N/A
This product can be used to comply with California Appliance Efficiency Standards 2016 **Title 20** and may be shipped to and sold in California.			N/A

* If a light fixture or component does not include a lamp or light source, it is the responsibility of the customer to select a lamp that meets the T24 and T20 requirements.

© 2019 Tech Lighting, L.L.C. All rights reserved. The "Tech Lighting" graphic is a registered trademark of Tech Lighting, L.L.C. Tech Lighting reserves the right to change specifications for product improvements without notification.

7400 Linder Avenue, Skokie, IL 60077
T 847.410.4400 | F 847.410.4500 | techlighting.com