canplas PLUMBING

Submittal Sheet

Part Description:

4" ABS DWV 45 Degree or 1/8 Long Turn Street Bend or Elbow Spigot X H

Part Number:

102404

Approvals and Listings maintained by:
Canplas Industries Ltd
Canada: 1-800-461-5300 USA: 1-888-461-5307

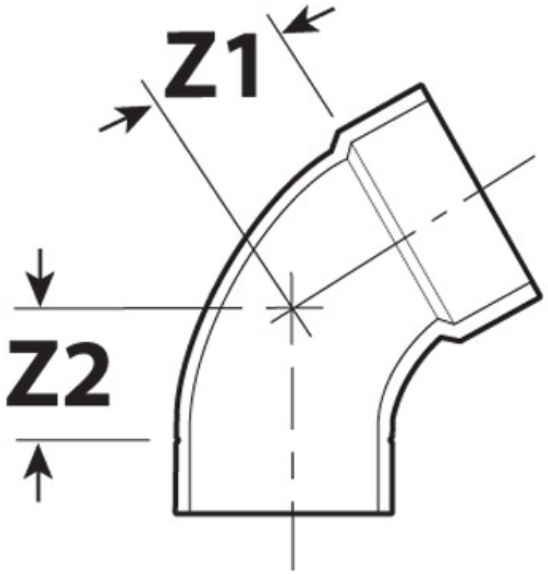

Part #	Part UPC	Colour	Size (inches)	Ctn Qty	Ctn Bar Code	Ctn. Wt (Kgs)	Ctn. Wt (lbs)	Skid Cubic (m)	Skid Cubic (ft)	Ctns/Skid
102404	662671100948	BLACK	4X4	10	10662671100945	5.65	12.43	1.86	65.82	32

Dimensions (inches)

Z1	Z2
2.19	2.22