canplas PLUMBING

Submittal Sheet

Part Description:

3"X 3" X 2" PVC WHITE DWV Single Long Turn Tee Wye H X H X H

Part Number:

194327

Approvals and Listings maintained by:
Canplas Industries Ltd
Canada: 1-800-461-5300 USA: 1-888-461-5307

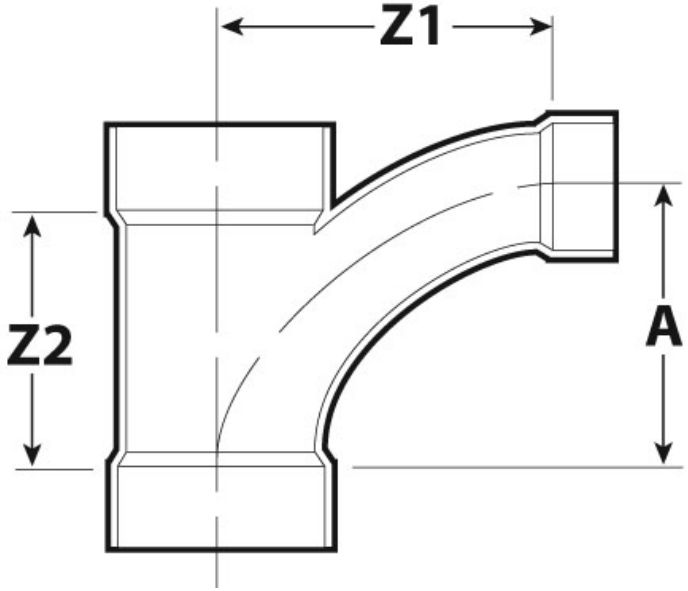

Part #	Part UPC	Colour	Size (inches)	Ctn Qty	Ctn Bar Code	Ctn. Wt (Kgs)	Ctn. Wt (lbs)	Skid Cubic (m)	Skid Cubic (ft)	Ctns/Skid
194327	662671192400	WHITE	3X3X2	12	10662671192407	8.13	17.89	1.86	65.82	32

Dimensions (inches)

A	Z1	Z2
5.13	5.73	4.45