SIEMENS

Indoor Load Center

Catalog Number
SN2040L1150

Plug-On Neutral Ready

Enclosure
Type 1

RATINGS:
150A MAXIMUM
BACK-FED MAIN BREAKER REQUIRES HOLD-DOWN MEANS AND LINE TERMINAL BARRIER. SEE ACCESSORY CHART FOR REQUIRED KIT(S).
120/240 V~, 60 HZ, 1Ø 3W
208Y/120 V~, 60 HZ, 1Ø 3W

FOR INSTALLATION BY A QUALIFIED PERSON IN ACCORDANCE WITH ALL LOCAL ELECTRICAL CODES AND/OR THE NATIONAL ELECTRICAL CODE ®.

SUITABLE FOR USE AS SERVICE EQUIPMENT WHEN MAIN BREAKER IS INSTALLED. WHEN USED AS SERVICE EQUIPMENT, APPLY "SERVICE DISCONNECT" LABEL TO FRONT NEXT TO MAIN BREAKER HANDLE.

WHEN USED AS SERVICE EQUIPMENT, UNUSED NEUTRAL BAR TERMINALS MAY BE USED TO TERMINATE EQUIPMENT GROUNDING WIRES IN THE COMBINATIONS INDICATED FOR EQUIPMENT GROUND BAR TERMINALS.

SUM OF QT BREAKER RATING IS NOT TO EXCEED 110 AMPS PER BRANCH CIRCUIT BUS STAB.

TO RESET BREAKERS WITH TRIPPED HANDLE POSITION BETWEEN "ON" AND "OFF", MOVE HANDLE TO "OFF" THEN TO "ON".

REMOVE TWISTOUTS FROM TRIM ONLY WHERE BREAKERS WILL BE INSTALLED. ALL OPENINGS MUST BE FILLED WITH BREAKERS OR FILLER PLATES.

THIS LOAD CENTER IS INVERTIBLE FOR BOTTOM FEED APPLICATIONS.

Siemens Industry, Inc. Norcross, Georgia U.S.A. **J2** 40901358 0101 Rev.01

IMPORTANT: DO NOT ALLOW PETROLEUM BASED (HYDROCARBON) SPRAYS, CHEMICALS, SOLVENTS OR ANY PAINT TO CONTACT INTERIOR COMPONENTS. PETROLEUM BASED CHEMICALS CAN CAUSE DEGRADATION OF ELECTRICAL INSULATING MATERIALS.

⚠ DANGER

Hazardous Voltage.
Will cause death, serious injury or substantial property damage.

Turn off power supplying this equipment before working inside.

⚠ PELIGRO

Voltaje peligroso. Causará la muerte, lesiones graves o daño substancial a la propiedad.

Desconecte el suministro de energía a este equipo antes de trabajar en su interior.

USE COPPER OR ALUMINUM 60°/75°C WIRE

SEE BREAKER MARKINGS FOR WIRE SIZE AND TORQUE REQUIREMENTS

TERMINALS		WIRE	TORQUE
A, B, N1		300 kcmil - 4 AWG	250 LB-INS
G		2/0 - 4 AWG	110 LB-INS
NEUTRAL/GROUND BARS (USE TYPE EC2GB or EC3GB GND BAR KIT ACCESSORY)		10-14 CU/10-12 AL 8 AWG 6-4 AWG	20 LB-INS 25 LB-INS 35 LB-INS
GROUND CONDUCTORS ONLY		(2)or(3) 14 AWG (2) 12-10 AWG	20 LB-INS 20 LB-INS
N2	ECLK2N NEUTRAL LUG	2/0 - 4 AWG	110 LB-INS
N2	ECLK3N NEUTRAL LUG	300 kcmil - 4 AWG	250 LB-INS
ECLK1-2 NEUTRAL LUG KIT ECLK2 NEUTRAL LUG KIT ECLK3 NEUTRAL LUG KIT		2/0 - 4 AWG 2/0 - 4 AWG 300 kcmil - 1 AWG	45 LB-INS 135 LB-INS 250 LB-INS
MAIN LUG TO BUS CONNECTION (1/4-20 NUT)			45 LB-INS
BONDING SCREW			45 LB-INS

ACCESSORIES	
DESCRIPTION	**CAT. NO.**
DOOR LOCK	ECQFL2
FILLER PLATE, 1"	QF3
QP HOLD-DOWN/BARRIER	ECMBR2
QNR LINE TERMINAL BARRIER	ECLTB3
SUBFEED LUG KIT	ECLK2125 ECLK2225
150-225 AMP MAIN LUG	ECMLK225
STANDBY PWR INTERLOCK KITS: ECSBPK01, ECSBPK02, ECSBPK05, ECSBPK07	

SHORT CIRCUIT CURRENT RATING THIS PANELBOARD HAS A MAXIMUM SHORT CIRCUIT CURRENT RATING OF 100,000 AMPS RMS SYMMETRICAL, 120/240V~. THE ACTUAL RATING IS DEPENDENT ON THE BRANCH BREAKERS INSTALLED IN THIS PANELBOARD AND THE MAIN/FEEDER BREAKER, IF ANY, INSTALLED AHEAD OF THIS PANELBOARD. THE CORRECT MAIN BREAKER/FEEDER/MAIN BREAKER/BRANCH BREAKER SERIES COMBINATIONS TO BE USED ARE LISTED IN THE TABULATION BELOW. ANY CIRCUIT BREAKER INSTALLED, REPLACED, OR ADDED IN THIS PANELBOARD MUST BE MANUFACTURED BY SIEMENS AND MUST BE OF THE CORRECT TYPE AS INDICATED IN THE TABULATION BELOW. USE OF OTHER CIRCUIT BREAKERS IN THIS EQUIPMENT MAY VOID THE WARRANTY.

MAIN BREAKER (SIEMENS TYPE)	MAIN/FEEDER BREAKER	PANELBOARD MAIN	BRANCH BREAKER	RATING AMPS
NONE USED	NONE USED	NONE USED or QP, QNR	QP, QG, QT, QTA, QTAN, QAF, QAFN, QAF2, QAF2N, QFGA2, QFGA2N, QPF, QPF2, QPF2N, QE, QE2, QNR	10,000
	NONE USED	NONE USED	QPH*, QAFH, QAFH2, QFGAH2, QPHF, QPHF2, QEH, QEH2, QNRH	22,000
	NONE USED	EQ9677, QPH*, QNRH	QP, QT, QTA, QTAN, QAF, QAFN, QAF2, QAF2N, QFGA2, QFGA2N, QPF, QPF2, QPF2N, QE, QE2, QNR	
	QPH, BLH, QSH, QNH, QPPH, QJH2, QRH2	NONE USED or QP, QNR		
	QSHH	NONE USED or QP, QPH*, QNR, QNRH	QP, QPH*, QT, QTA, QTAN, QAF, QAFN, QAF2, QAF2N, QAFH, QAFH2, QFGA2, QFGA2N, QFGAH2, QPF, QPF2, QPF2N, QPHF, QPHF2, QE, QE2, QEH, QEH2, QNR, QNRH	42,000
	NONE USED	NONE USED	HQP*, HQAF2, HQFGA2, HQPF2, HQNR	65,000
		HQP*, HQNR	QP, QPH*, QT, QTA, QTAN, QAF, QAFN, QAF2, QAF2N, QAFH, QAFH2, QFGA2, QFGA2N, QFGAH2, QPF, QPF2, QPF2N, QPHF, QPHF2, QE, QE2, QEH, QEH2, QNR, QNRH	
	ED4, ED6, HQP, HBL, HQS, HQN, HQPP, HQR2	NONE USED or QP, QPH*, HQP*, QNR, QNRH, HQNR		
NDGA, NFGA	QPH, BLH			
JXD2(-A), JD6(-A), JXD6(-A), LD6(-A), LXD6(-A), MD6, MXD6, ND6, SND6-B, NXD6, NJJA, NJGA, NLGB, NMG, NNG, NPG, PD6, SPD6-B, PXD6, RD6, RXD6	QPH, BLH, QS, QN, QR2			
FD6, FXD6	NONE USED or QP, BL, QS, QN, QJ2, QR2			
ND6, NXD6, or Class J, T, R, or L Fuses	QPH, BLH, QN			
JXD2(-A), JD6(-A), JXD6(-A), LD6(-A), LXD6(-A), MD6, MXD6, ND6, SND6-B, NXD6, PD6, SPD6-B, PXD6, RD6, RXD6,NDGA, NFGA, NJJA, NJGA, NLGB, NMG, NNG, NPG	NONE USED	QPH*, HQP*, QNR, QNRH, HQNR		
JXD2(-A), JD6(-A), JXD6(-A), LD6(-A), LXD6(-A)	QJH2			
NONE USED	HQSH, HQPH, HQPPH, HQJ2H, HQR2H, HED4, HED6, NGB	NONE USED or QP, QPH*, HQP*	QP, QPH*, HQP*, QT, QTA, QTAN, QAF, QAFN, QAF2, QAF2N, QAFH, QAFH2, HQAF2, QFGA2, QFGA2N, QFGAH2, HQFGA2, QPF, QPF2, QPF2N, QPHF, QPHF2, HQPF2, QE, QE2, QEH, QEH2	100,000
HFD6, HFXD6, HFGA, HJD6(-A), HJXD6(-A), HJGA, HLD6(-A), HLXD6(-A), HLGB, HMD6, HMXD6, HMG, HND6, SHND6-B, HNXD6, HNG, HPD6, SHPD6-B, HPXD6, HPG, HRD6, HRXD6, or Class J, T, R, or L Fuses	ED4, ED6, QS, QR2			
HFD6, HFXD6, or 300V Class T Fuses – 200A Max	NONE USED or QP, BL			
HDGA, HFGA, or 300V Class T Fuses – 600A Max	NONE USED or QPH, BLH	NONE USED or QPH*, HQP*	QPH*, HQP*	

*Type QPH and HQP breakers installed in this panel are limited to 100 amps max. when installed on a circuit capable of delivering fault current greater than 10,000 amps.

NL150-2250-Rev.F

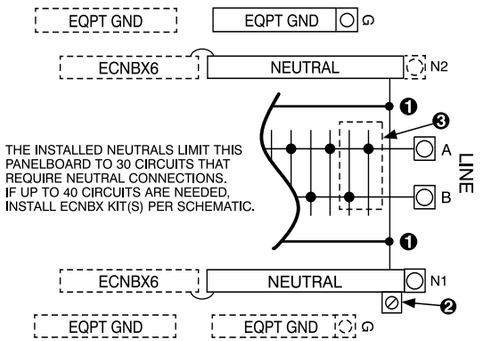

THE INSTALLED NEUTRALS LIMIT THIS PANELBOARD TO 30 CIRCUITS THAT REQUIRE NEUTRAL CONNECTIONS. IF UP TO 40 CIRCUITS ARE NEEDED, INSTALL ECNBX KIT(S) PER SCHEMATIC.

1. NEUTRAL BUS FOR PLUG-ON NEUTRAL CIRCUIT BREAKERS
2. BOND WHEN REQ'D
3. BACK-FED BRKR WHEN USED

Assembled in Mexico

© 2020 Copyright Siemens Industry, Inc.
® The National Electrical Code is a registered trademark of the National Fire Protection Association.