Replacement Parts List

00® Circulators

SUPERSEDES: January 22, 2017

EFFECTIVE: July 18, 2017

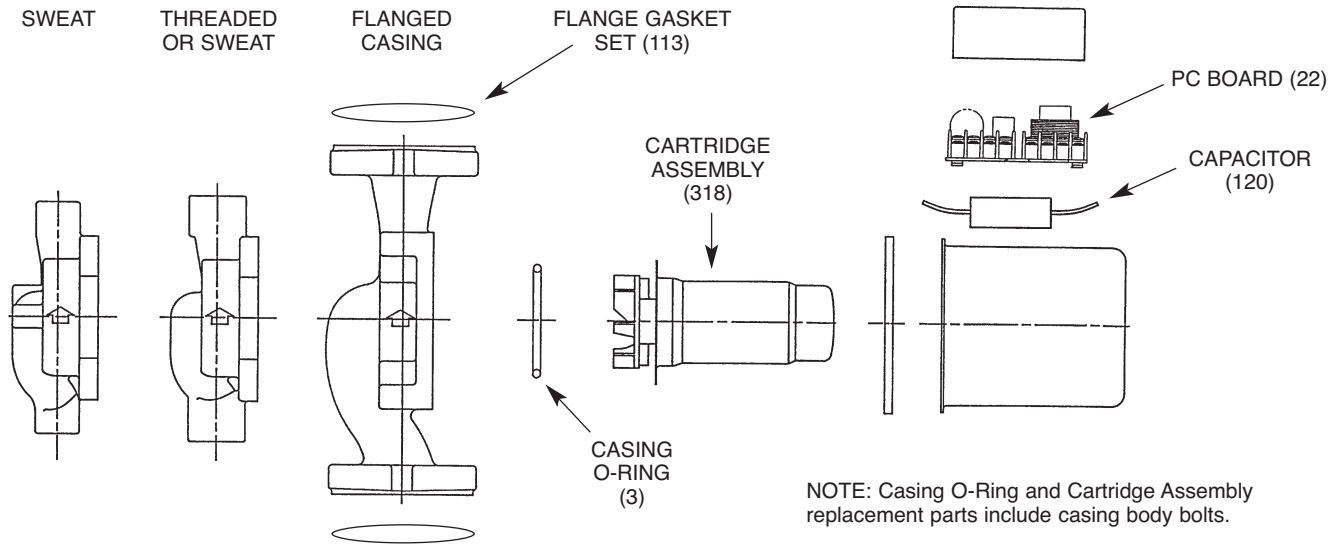

NOTE: Casing O-Ring and Cartridge Assembly replacement parts include casing body bolts.

003-

PUMP MODEL NUMBER	CASING O-RING	FLANGE GASKET SET	CAPACITOR or PC BOARD	CARTRIDGE ASSY. COMPLETE	VALVE ASSY. TRANS/RELAY
003-B4	007-003RP	NA	007-002RP	003-001RP	NA
003-B4-1 (GRAINGER)	NA	NA	NA	003-002RP	NA
003-B4-1IFC	007-003RP	NA	007-002RP	003-003RP	006-044RP
003-B4-1PNP	007-003RP	NA	007-002RP	003-001RP	NA
003-B4-2 (GRAINGER)	NA	NA	NA	003-002RP	NA
003-B4-2IFC	007-003RP	NA	007-002RP	003-001RP	006-047RP
003-B4-2PNP	007-003RP	NA	007-002RP	003-001RP	NA
003-B4-3PNP	007-003RP	NA	007-002RP	003-001RP	006-047RP
003-B4-4PNP	007-003RP	NA	007-002RP	003-001RP	006-047RP
003-B4-IFC	007-003RP	NA	007-002RP	003-003RP	006-044RP
003-B4-PNP	007-003RP	NA	007-002RP	003-001RP	NA
003-B5Y	007-003RP	NA	007-002RP	003-001RP	NA
003-B6Y	007-003RP	NA	008-054RP	003-001RP	NA
003-BC4	007-003RP	NA	007-002RP	003-001RP	NA
003-BC4-1	007-003RP	NA	007-002RP	003-001RP	NA
003-BC4-10PNP	007-003RP	NA	007-002RP	003-001RP	006-047RP
003-BC4-11PNP	007-003RP	NA	007-002RP	003-001RP	006-047RP
003-BC4-1IFC	007-003RP	NA	007-002RP	003-001RP	006-047RP
003-BC4-1PNP	007-003RP	NA	007-002RP	003-001RP	NA
003-BC4-2 (GRAINGER)	NA	NA	NA	003-002RP	NA
003-BC4-2IFC	007-003RP	NA	007-002RP	003-001RP	006-047RP
003-BC4-2PNP	007-003RP	NA	007-002RP	003-001RP	006-047RP
003-BC4-3 (GRAINGER)	NA	NA	NA	003-002RP	NA
003-BC4-3PNP	007-003RP	NA	007-002RP	003-001RP	006-047RP
003-BC4-4	007-003RP	NA	007-002RP	003-001RP	NA
003-BC4-4PNP	007-003RP	NA	007-002RP	003-001RP	NA
003-BC4-5PNP	007-003RP	NA	007-002RP	003-001RP	NA
003-BC4-6PNP	007-003RP	NA	007-002RP	003-001RP	006-047RP
003-BC4-7PNP	007-003RP	NA	007-002RP	003-001RP	006-047RP
003-BC4-8PNP	007-003RP	NA	007-002RP	003-001RP	NA
003-BC4-9PNP	007-003RP	NA	007-002RP	003-001RP	NA
003-BC4-IFC	007-003RP	NA	007-002RP	003-001RP	006-047RP

007- (Continued)

PUMP MODEL NUMBER	CASING O-RING	FLANGE GASKET SET	CAPACITOR or PC BOARD	CARTRIDGE ASSY. COMPLETE	VALVE ASSY. TRANS/RELAY
007-F4-8	008-005RP	007-007RP	007-002RP	007-042RP	
007-F4Y	008-005RP	007-007RP	007-002RP	007-041RP	
007-F5	008-005RP	007-007RP	007-002RP	007-042RP	NA
007-F5-10	008-005RP	007-007RP	007-046RP	007-042RP	NA
007-F5-10IFC	008-005RP	007-007RP	007-002RP	007-042RP	0010-025RP
007-F5-11IFC	008-005RP	007-007RP	007-002RP	007-042RP	0010-025RP
007-F5-12	008-005RP	007-007RP	007-002RP	007-042RP	NA
007-F5-12IFC	008-008RP	007-007RP	007-002RP	007-042RP	0010-025RP
007-F5-13	008-047RP	007-054RP	007-002RP	007-056RP	NA
007-F5-13IFC	008-008RP	007-007RP	007-002RP	007-042RP	0010-025RP
007-F5-14	008-005RP	007-007RP	007-002RP	007-042RP	NA
007-F5-15	008-005RP	007-007RP	007-002RP	007-042RP	NA
007-F5-16	008-005RP	007-007RP	007-002RP	007-042RP	NA
007-F5-17	008-005RP	007-007RP	007-002RP	007-042RP	NA
007-F5-18	008-005RP	007-007RP	007-002RP	007-042RP	NA
007-F5-19	008-005RP	007-007RP	007-002RP	007-042RP	NA
007-F5-1IFC	008-005RP	007-007RP	007-002RP	007-042RP	006-047RP
007-F5-2IFC (GRAINGER)	NA	007-066RP	NA	007-048RP	006-047RP
007-F5-3IFC	008-005RP	007-007RP	007-002RP	007-042RP	006-047RP
007-F5-4IFC (GRAINGER)	NA	007-066RP	NA	007-048RP	NA
007-F5-5	008-005RP	007-007RP	007-002RP	007-042RP	NA
007-F5-5IFC	008-005RP	007-007RP	007-002RP	007-042RP	006-047RP
007-F5-6IFC	008-005RP	007-007RP	007-002RP	007-042RP	006-047RP
007-F5-7IFC	008-005RP	007-007RP	007-002RP	007-042RP	0010-025RP
007-F5-8	008-005RP	007-007RP	007-002RP	007-042RP	NA
007-F5-8IFC	008-005RP	007-007RP	007-002RP	007-042RP	0010-025RP
007-F5-9 (GRAINGER)	NA	007-066RP	NA	007-048RP	
007-F5-9IFC (GRAINGER)	NA	007-066RP	NA	007-048RP	0010-025RP
007-F5-IFC	008-005RP	007-007RP	007-002RP	007-042RP	006-047RP
007-F6A	008-005RP	007-007RP	007-046RP	007-042RP	NA
007-F6A-1	008-005RP	007-007RP	007-046RP	007-042RP	NA
007-F6U	008-005RP	007-007RP	008-054RP	007-061RP	NA
007-F6Y	008-005RP	007-007RP	007-046RP	007-042RP	NA
007-F6Y-1	008-005RP	007-007RP	007-046RP	007-042RP	NA
007-F6Y-IFC	008-005RP	007-007RP	007-046RP	007-042RP	0010-025RP
007-F7	008-005RP	007-007RP	007-065RP	007-063RP	NA
007-F7-1	008-005RP	007-007RP	007-065RP	007-063RP	NA
007-F7-1IFC	008-005RP	007-007RP	007-065RP	007-063RP	0010-025RP
007-F7-2	008-005RP	007-007RP	007-065RP	007-063RP	NA
007-F7-3	008-005RP	007-007RP	007-065RP	007-063RP	NA
007-F7-IFC	008-005RP	007-007RP	007-065RP	007-063RP	0010-025RP
007-F8	008-005RP	007-007RP	007-002RP	007-068RP	NA
007-MSF1-1IFC	008-005RP	007-007RP	007-062RP	007-063RP	0010-025RP
007-MSF1-IFC	008-005RP	007-007RP	007-062RP	007-063RP	0010-025RP
007-S22	0010-026RP		NA	007-041RP	
007-S23	0010-026RP		007-002RP	007-041RP	
007-SF5	008-005RP	007-007RP	007-002RP	007-045RP	NA
007-SF5-1	008-005RP	007-007RP	007-002RP	007-045RP	NA
007-SF5-1IFC (GRAINGER)	NA	007-066RP	NA	007-047RP	NA
007-SF5-2 (GRAINGER)	NA	007-066RP	NA	007-047RP	
007-SF5-3		007-007RP	007-002RP	007-045RP	NA
007-SF5-IFC	008-005RP	007-007RP	007-002RP	007-045RP	0010-025RP
007-SF5R	008-005RP	007-007RP	007-002RP	007-045RP	NA
007-SF6A	008-005RP	007-007RP	007-046RP	007-045RP	NA
007-SF6Y	008-005RP	007-007RP	007-046RP	007-045RP	NA
007-ST5-1	008-005RP	NA	007-002RP	007-045RP	NA
007-ST5-2	008-005RP		007-002RP	007-041RP	NA
007-ST5-3	008-047RP	NA	007-002RP	007-041RP	NA
007-ST5R-1	008-047RP	NA	007-002RP	007-041RP	NA
007-VDTF5	008-005RP	007-007RP	008-056RP	007-042RP	NA