01 Series Three-Handle Tub & Shower

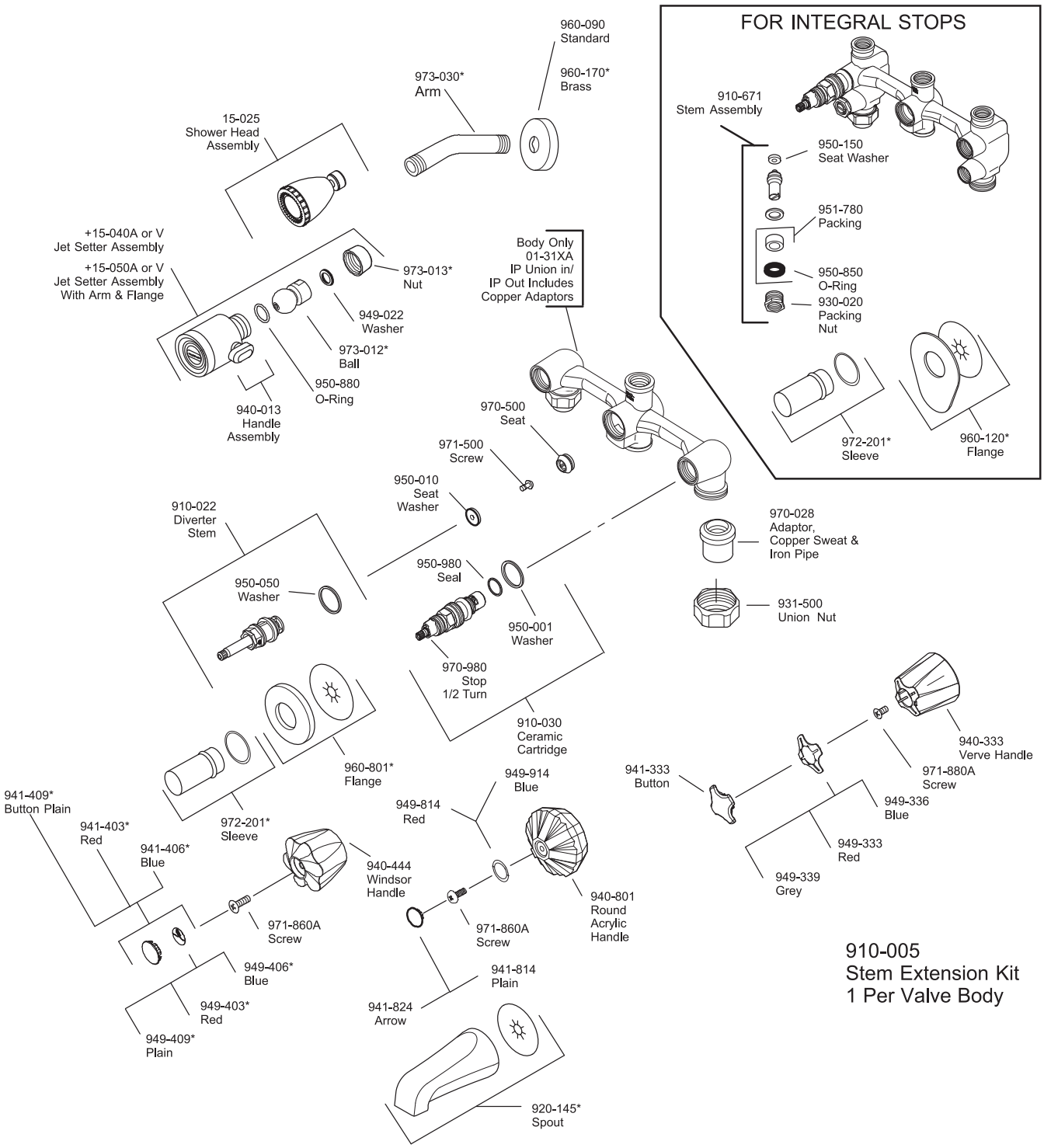

FINISHES * Indicates Finish

A Polished Chrome	M Almond	U Rustic Bronze
B Black	N Antique Bronze	V PVD Polished Brass
E Rustic Pewter	P Polished Brass	W White
D PVD Polished Nickel	Q Satin Brass	Y Tuscan Bronze
J PVD Brushed Nickel	R Copper	Z Oil-Rubbed Bronze
K Satin Nickel	S Stainless Steel	
L Satin Stainless	T Biscuit	

All finishes not available on all parts

Pfister™

15 Series In-Wall Diverter Valve

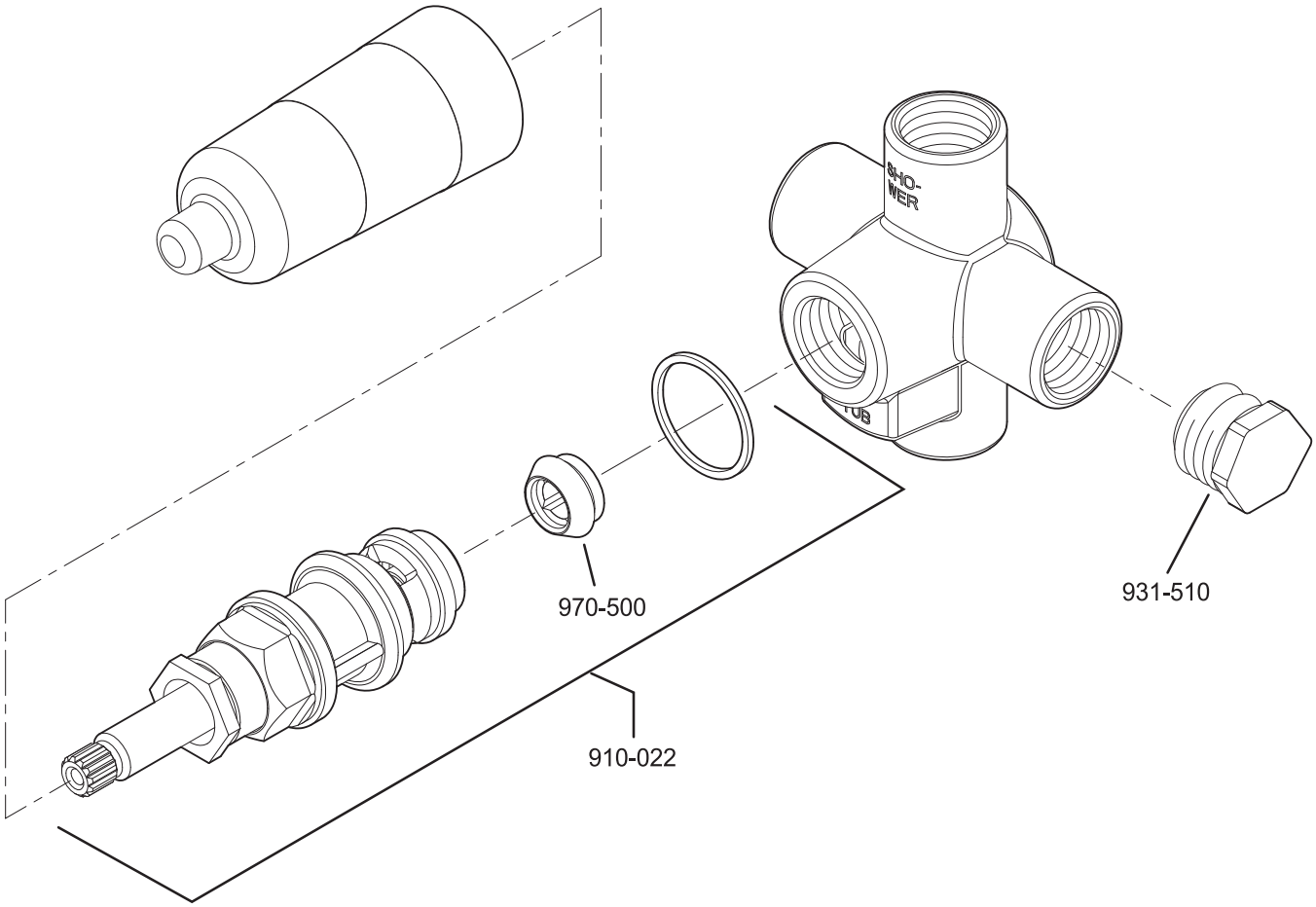

FINISHES * Indicates Finish

A Polished Chrome	M Almond	U Rustic Bronze
B Black	N Antique Bronze	V PVD Polished Brass
E Rustic Pewter	P Polished Brass	W White
D PVD Polished Nickel	Q Satin Brass	Y Tuscan Bronze
J PVD Brushed Nickel	R Copper	Z Oil-Rubbed Bronze
K Satin Nickel	S Stainless Steel	
L Satin Stainless	T Biscuit	

All finishes not available on all parts

Pfister™

16 Series - In-Wall Diverter Valve & Trim

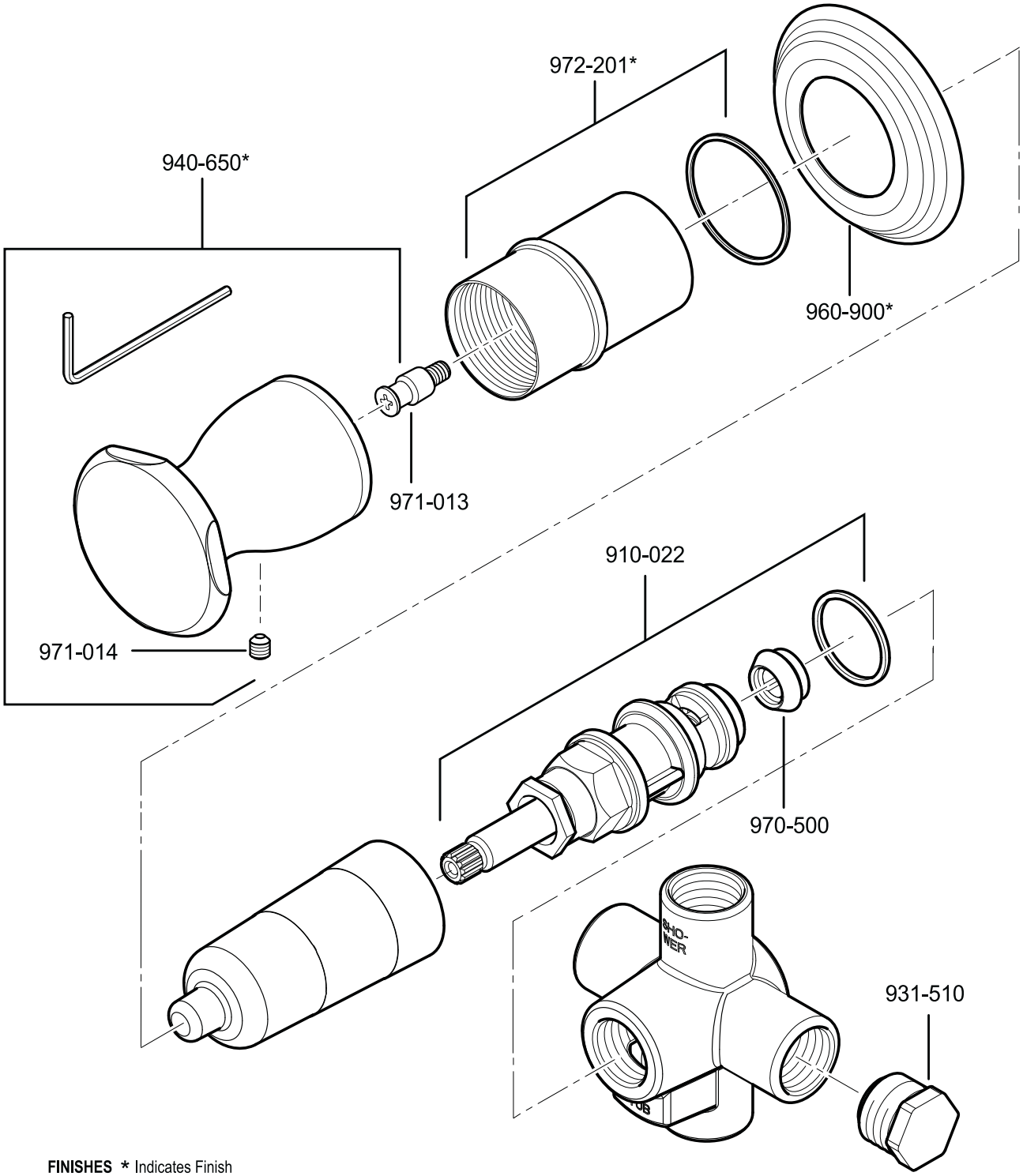

FINISHES * Indicates Finish

A Polished Chrome	**K** Satin Nickel	**U** Rustic Bronze
B Black	**L** Satin Stainless Steel	**V** PVD Polished Brass
C Light Gray	**P** Polished Brass	**W** White
D PVD Polished Nickel	**Q** Fired Copper	**Y** Tuscan Bronze
E Rustic Pewter	**R** Antique Copper	**AB** Aged Brass
G Velvet Aged Bronze	**S** Stainless Steel	**MC** Midnight Chrome
J PVD Brushed Nickel	**T** Biscuit	

All finishes not available on all parts

Pfister™