canplas PLUMBING

Submittal Sheet

Part Description:

2" ABS DWV 90 Degree Long Turn Bend or Elbow H X H

Part Number:

102252L

Approvals and Listings maintained by:
Canplas Industries Ltd
Canada: 1-800-461-5300 USA: 1-888-461-5307

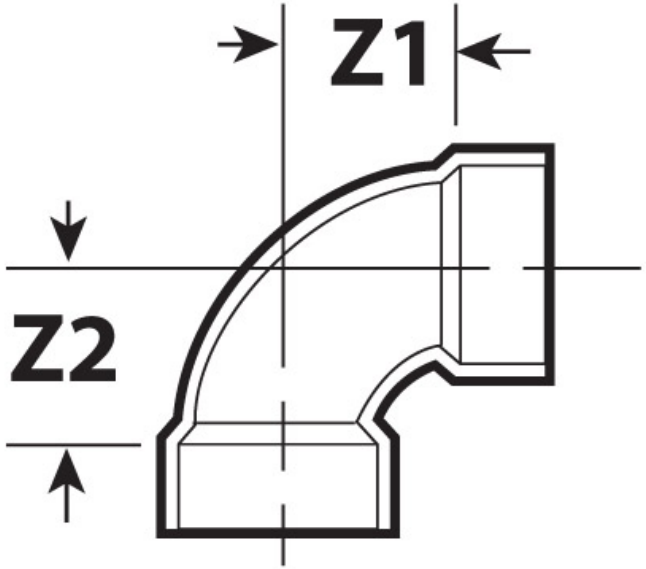

Part #	Part UPC	Colour	Size (inches)	Ctn Qty	Ctn Bar Code	Ctn. Wt (Kgs)	Ctn. Wt (lbs)	Skid Cubic (m)	Skid Cubic (ft)	Ctns/Skid
102252L	662671103369	BLACK	2X2	50	10662671103366	5.81	12.78	1.86	65.82	32

Dimensions (inches)

Z1	Z2
2.22	2.23