canplas PLUMBING

Submittal Sheet

Part Description:

1-1/2" X 1-1/2" X 1-1/2" ABS DWV Street Sanitary Tee Spigot X H X H

Part Number:

105151L

Approvals and Listings maintained by:
Canplas Industries Ltd
Canada: 1-800-461-5300 USA: 1-888-461-5307

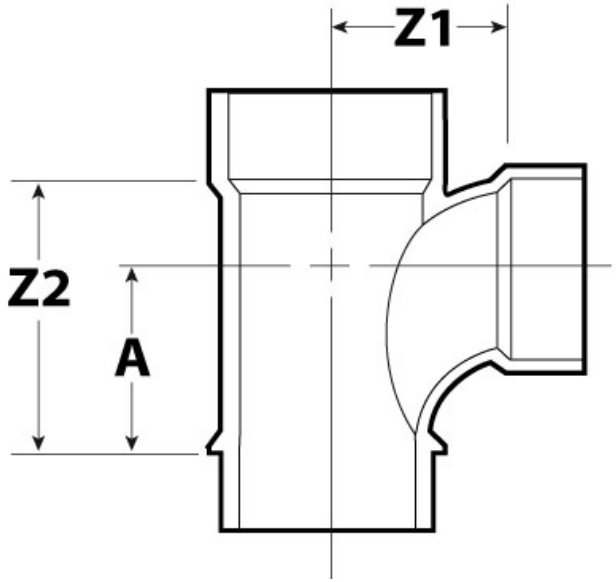

Part #	Part UPC	Colour	Size (inches)	Ctn Qty	Ctn Bar Code	Ctn. Wt (Kgs)	Ctn. Wt (lbs)	Skid Cubic (m)	Skid Cubic (ft)	Ctns/Skid
105151L	662671106773	BLACK	1-1/2X1-1/2X1-1/2	50	10662671106770	5.32	11.70	1.79	63.37	48

Dimensions (inches)

A	Z1	Z2
1.72	1.72	2.74