canplas PLUMBING

Submittal Sheet

Part Description:

4" PVC WHITE DWV Long Sweep Bend or Elbow H X H

Part Number:

192279

Approvals and Listings maintained by:
Canplas Industries Ltd
Canada: 1-800-461-5300 USA: 1-888-461-5307

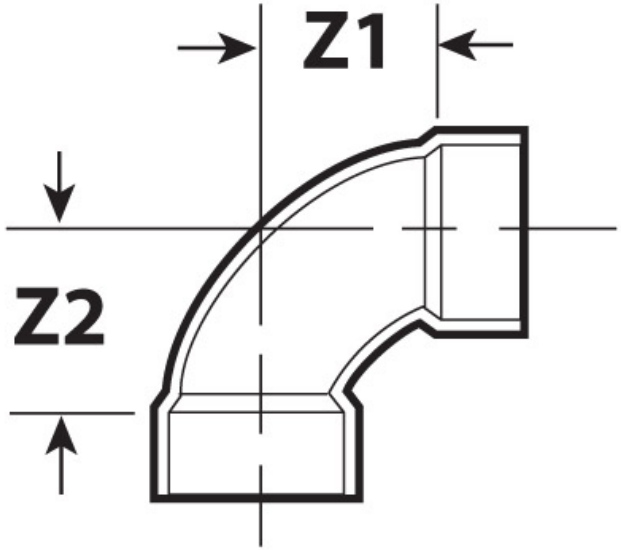

Part #	Part UPC	Colour	Size (inches)	Ctn Qty	Ctn Bar Code	Ctn. Wt (Kgs)	Ctn. Wt (lbs)	Skid Cubic (m)	Skid Cubic (ft)	Ctns/Skid
192279	662671191601	WHITE	4X4	12	10662671191608	13.23	29.11	1.90	67.04	18

Dimensions (inches)

Z1	Z2
4.61	4.78