COMPASS®

DATE:	LOCATION:
TYPE:	PROJECT:
CATALOG #:	

CUW

DECORATIVE LED AC/EMERGENCY LIGHT

tradeSELECT®

FEATURES

- Includes self-diagnostic/self-test feature to monitor proper operation
- LED life cycle of more than 10 years
- Quick installation
- Universal 100-300VAC input
- Includes long-life 4.8VDC Nickel Cadmium battery for UL recognized 90 minute operation
- Full re-charge within 24 hours
- Provided with water-proof test switch and AC-On indicator
- Photo-cell standard
- UL924 Wet Location Listed, 0°C to 50°C Standard Model, -20°C to 40°C with optional heater

RELATED PRODUCTS

Exit & Message Signs

Emergency Lighting Units

Battery Packs

Remote Heads & Fixtures

UL924 Title 20

SPECIFICATIONS

DESCRIPTION

- The CUW Series offers LED performance in "normally-on" AC and emergency lighting modes
- The unit has a prismatic polycarbonate refractor with a durable die-cast aluminum housing available with durable powder coated finish in dark bronze
- The housing is fully sealed and gasketed. It is designed for wall mounting with a universal K/O pattern in the back-plate for installation to most standard size junction boxes
- Illumination is provided by 2 high power LEDs driven at 3 watts each
- LED color at 5500K. Offers 1275 lumens in Normally-On mode and 351 lumens in emergency mode
- In the unlikely event that any single LED should fail the remaining LED will continue to function

APPLICATION

- The CUW Series can be applied in areas that are susceptible to rain and severe moisture, such as parking decks and outdoor commercial applications.

COMPLIANCES

- UL924 Listed for Wet Location
- NFPA 101
- NFPA 70
- OSHA

WARRANTY

- 2 year full unit warranty
- See HLI Standard Warranty for additional information

ORDERING GUIDE

Catalog Number	Description
CUWZ-PC	Outdoor LED AC/Emergency, 0° to 50°C, with Photo-Control, Dark Bronze Finish
CUWZ-HTR-PC	Outdoor LED AC/Emergency, -20° to 40°C, with HTR and Photo-Control, Dark Bronze Finish

INPUT POWER REQUIREMENTS

		120V	277V	120V	277V
CUWZ-PC	AC On	9.00 W	8.89 W	0.13 A	0.07 A
CUWZ-PC	AC Off	2.04 W	2.15 W	0.04 A	0.02 A
CUWZ-HTR-PC	AC On	18.47 W	58.90 W	0.21 A	0.25 A
CUWZ-HTR-PC	AC Off	11.51 W	52.15 W	0.11 A	0.20 A

Single Carton Weight	4 lbs.
Master Carton Quantity	6 each

Photometric files are available on the Compass website.

DIMENSIONS

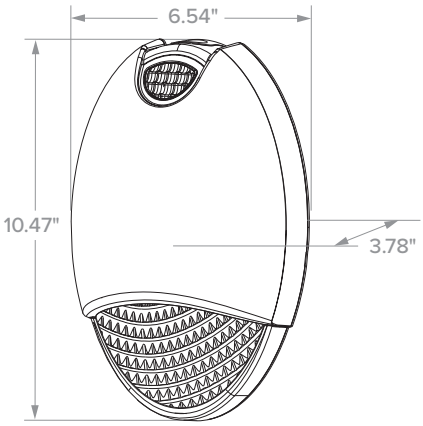

© 2020 Compass, a division of Hubbell Lighting, Inc. Specifications subject to change without notice.
701 Millennium Blvd • Greenville, SC 29607 / Tel (864)-678-1000 / Website www.compasslightingproducts.com

HUBBELL Lighting