canplas PLUMBING

Submittal Sheet

Part Description:

1-1/2" ABS DWV 90 Degree Vent Bend or Elbow H X H

Part Number:

102201

Approvals and Listings maintained by:
Canplas Industries Ltd
Canada: 1-800-461-5300 USA: 1-888-461-5307

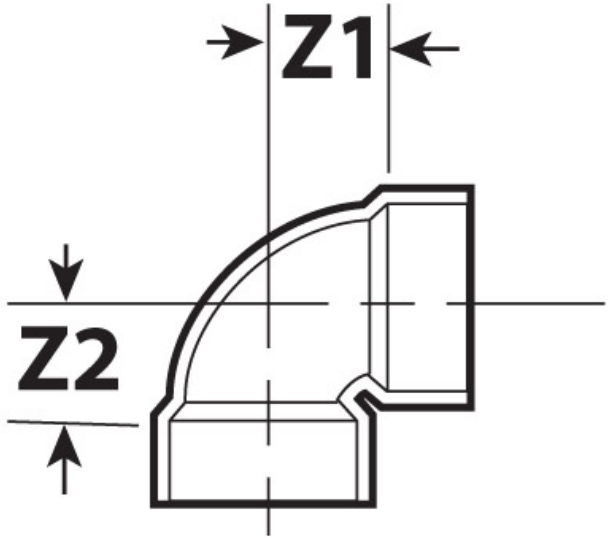

Part #	Part UPC	Colour	Size (inches)	Ctn Qty	Ctn Bar Code	Ctn. Wt (Kgs)	Ctn. Wt (lbs)	Skid Cubic (m)	Skid Cubic (ft)	Ctns/Skid
102201	662671106506	BLACK	1-1/2X1-1/2	50	10662671106503	3.54	7.79	1.79	63.37	72

Dimensions (inches)

Z1	Z2
1.20	1.26