canplas PLUMBING

Submittal Sheet

Part Description:

1-1/2" ABS DWV 1/6 or 60 Degree Bend or Elbow H X H

Part Number:

102601

Approvals and Listings maintained by:
Canplas Industries Ltd
Canada: 1-800-461-5300 USA: 1-888-461-5307

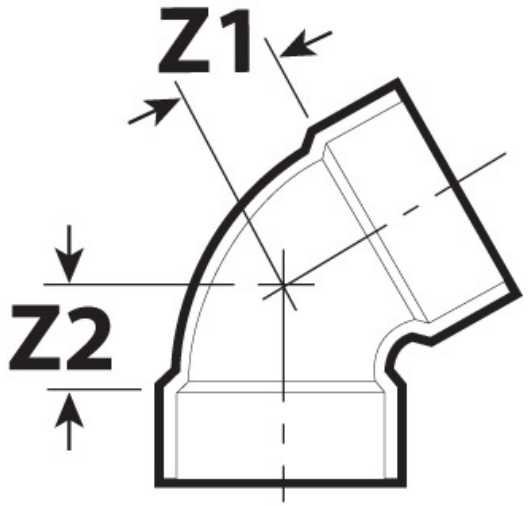

Part #	Part UPC	Colour	Size (inches)	Ctn Qty	Ctn Bar Code	Ctn. Wt (Kgs)	Ctn. Wt (lbs)	Skid Cubic (m)	Skid Cubic (ft)	Ctns/Skid
102601	662671101310	BLACK	1-1/2X1-1/2	60	10662671101317	3.45	7.59	1.79	63.37	72

Dimensions (inches)

Z1	Z2
1.05	0.89