canplas PLUMBING

Submittal Sheet

Part Description:

4"X 4" X 3" PVC WHITE DWV Single Long Turn Tee Wye H X H X H

Part Number:

194338

Approvals and Listings maintained by:
Canplas Industries Ltd
Canada: 1-800-461-5300 USA: 1-888-461-5307

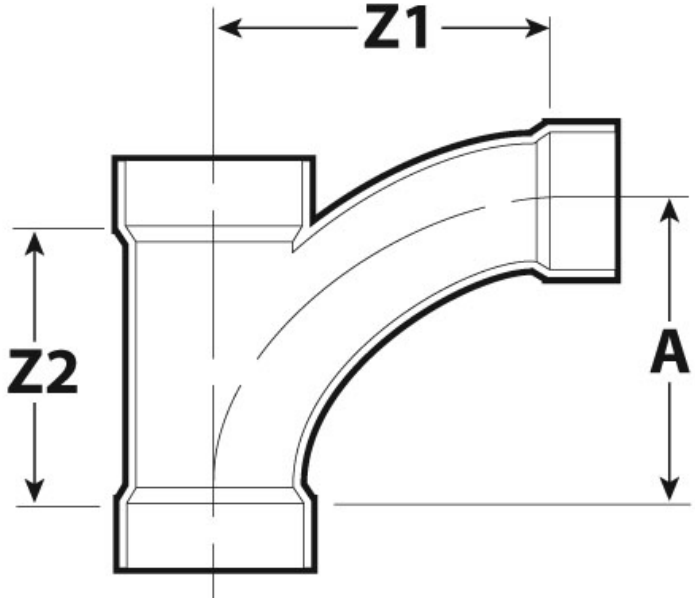

Part #	Part UPC	Colour	Size (inches)	Ctn Qty	Ctn Bar Code	Ctn. Wt (Kgs)	Ctn. Wt (lbs)	Skid Cubic (m)	Skid Cubic (ft)	Ctns/Skid
194338	662671191519	WHITE	4X4X3	8	10662671191516	12.25	26.95	1.90	67.04	18

Dimensions (inches)

A	Z1	Z2
7.62	8.15	6.51