canplas PLUMBING

Submittal Sheet

Part Description:

4" ABS DWV Sanitary Tee H X H X H

Part Number:

102154L

Approvals and Listings maintained by:
Canplas Industries Ltd
Canada: 1-800-461-5300 USA: 1-888-461-5307

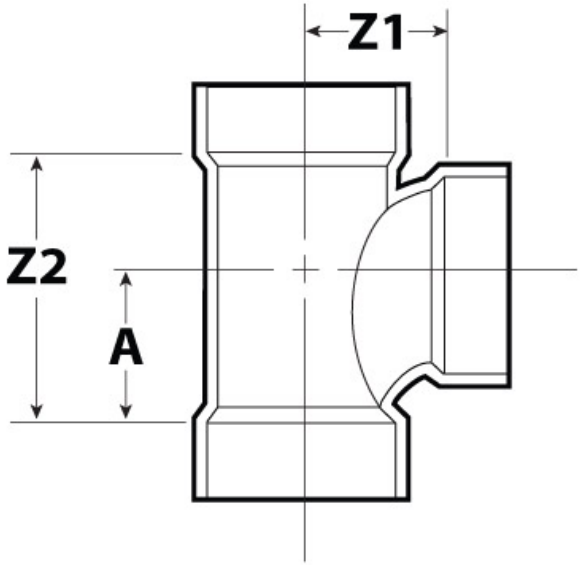

Part #	Part UPC	Colour	Size (inches)	Ctn Qty	Ctn Bar Code	Ctn. Wt (Kgs)	Ctn. Wt (lbs)	Skid Cubic (m)	Skid Cubic (ft)	Ctns/Skid
102154L	662671107237	BLACK	4X4X4	12	10662671107234	11.72	25.78	1.90	67.04	18

Dimensions (inches)

A	Z1	Z2
3.85	3.78	6.14