Part Number	Width "A"	Clamps SAE	Clamps Qty.	Dia. Inch Max	Dia. Inch Min
SRC-9	1.50"	032	1	2.50	1.56
SRC-11	1.50"	044	1	3.25	2.31
SRC-15	2.13"	064	2	4.50	2.62
SRC-16P	3.00"	080	2	5.50	3.62
SRC-19	2.13"	088	2	6.00	4.09
SRC-22	2.13"	096	2	6.50	4.50
SRC-25	4.00"	116	2	7.75	5.75
SRC-27	4.00"	128	2	8.50	6.50
SRC-28	4.00"	140	2	9.25	7.25
SRC-33	4.00"	152	2	10.00	8.00
SRC-35	4.00"	164	2	10.75	8.75
SRC-37	4.00"	184	2	12.00	10.00
SRC-39	4.00"	196	2	12.75	10.75
SRC-46	4.00"	(2) 116	2	14.50	11.50
SRC-54	4.00"	(2) 128	2	17.00	14.00
SRC-56	4.00"	(2) 140	2	17.50	14.50
SRC-59	4.00"	(2) 152	2	18.50	16.00
SRC-63	4.00"	164+152	2	19.75	16.75
SRC-73	4.00"	(2) 184	2	23.00	20.00
SRC-82	4.00"	164+248	2	25.75	22.75
SRC-84	4.00"	164+248	2	26.50	23.50
SRC-94	4.00"	140+184+212	2	29.75	26.75
SRC-105	4.00"	140+184+212	2	33.40	30.40
SRC-110	4.00"	140+212+212	2	34.75	31.75

REVISIONS				
ZONE	REV	DESCRIPTION	DATE	APPROVED
	1	Added SRC-16P	12Mar10	AJD
	2	Added Sizes > 59	12Oct11	AJD

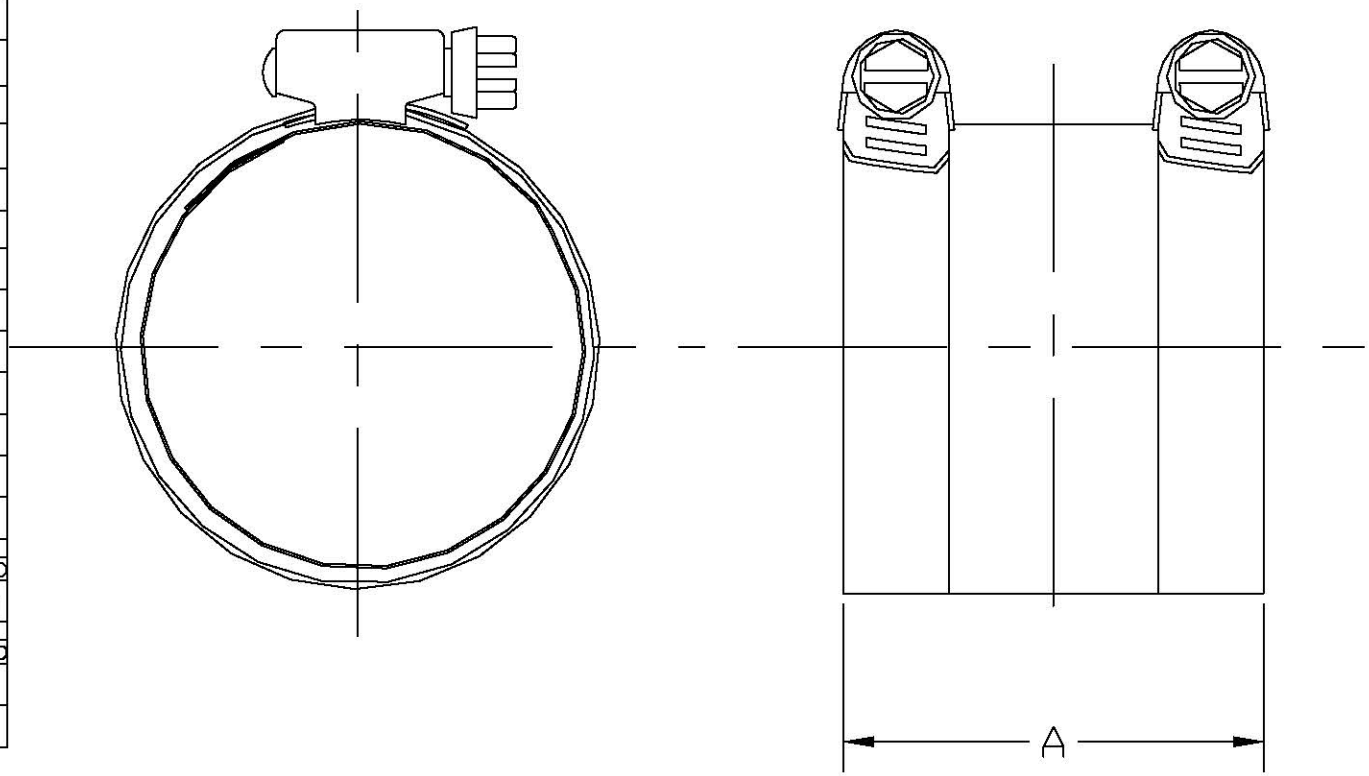

Notes

1. All Components 300 Series Stainless Steel
2. Clamps are Spot Welded to Shields
3. SRC-9 & SRC-11 Utilize 1 Clamp in the Center of the Shield
4. Shield Thickness .012", 304SS
5. Installation Torque up to 60"lbs.

UNLESS OTHERWISE SPECIFIED:
DIMENSIONS ARE IN INCHES
TOLERANCES
DECIMALS .XX ± .06 .XXX ± .032
ANGULAR ± 0.5°
DO NOT SCALE DRAWING

DRAWN AJD DATE 12Oct11
CHECKED

FERNCO

SRC Shields

SIZE A | FSCM NO. | DWG NO. SRC-01 | REV 2