Fluidmaster®

3/4" x 3/8" DISHWASHER FITTING

Models Available:

Bulk #7150W
Blister Card #7151
Dishwasher Supply Kit #6W48K
Dishwasher Supply Kit #6W60K
Dishwasher Supply Kit #6W72K
Dishwasher Supply Kit #B6W48K
Dishwasher Supply Kit #B6W60K
Dishwasher Supply Kit #B6W72K
Dishwasher Supply Kit #1W48CUK

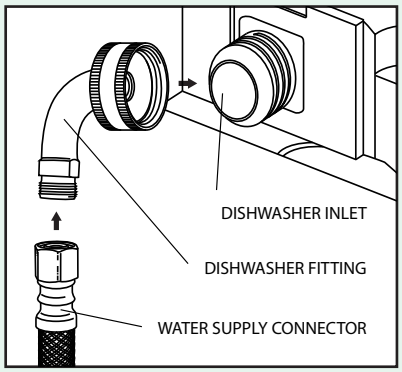

THE FLUIDMASTER® ADVANTAGE:

- High Quality
- Machined Brass For Better Flow
- Reduced Turbulence
- Faster Fill
- More Efficient

EASY INSTALLATION

Smooth bend allows better water flow with less turbulence

Low lead compliant when used with Fluidmaster® Connector

Large inner diameter allows better water flow

All dishwasher models manufactured by Whirlpool® Corporation after September 2009 including Whirlpool®, Maytag®, Amana®, KitchenAid® and Jenn-Air® branded dishwashers will have a 3/4" inlet size. The design change of the inlet is intended to make installation easier to align and attach and will require less torque to make an adequate seal. This will improve the quality of the installation, saving time and effort.

MODEL NUMBER	UPC 0 39961	PACKAGING	CASE QUANTITIES	CASE DIMENSIONS	CUBIC FEET	CASE WEIGHT	SCCI 2 of 5 39961
7150W	039961476180	Bulk	10 Per Master	5-1/4 X 4-3/8 X 4-3/8	.0565	.31	077490
7151W	039961476197	Blister Card	10 Per Master	7-3/8 X 5-3/8 X 4-7/16	.0985	.31	077437
Kits Containing 3/8" & 3/4" Elbows with 3/8" x 3/8" Hose In Various Lengths							
6W48K	039961371362	Carded Kit	10 Per Master	12 X 5-1/2 X 7-1/2	.2865	.38	371362
6W60K	039961371379	Carded Kit	10 Per Master	14-5/8 X 5-1/2 X 7-1/2	.3491	N/A	401172
6W72K	039961371355	Carded Kit	10 Per Master	17-7/16 X 5-9/16 X 7-1/2	.4185	.51	507096
B6W48K	039961371300	Bulk Kit	10 Per Master	16-1/2 X 8 X 4-1/2	.3438	.55	207057
B6W60K	039961371393	Bulk Kit	10 Per Master	21-5/8 X 8-5/8 X 4-1/2	.4857	.71	401180
B6W72K	039961371386	Bulk Kit	10 Per Master	21-5/8 X 8-5/8 X 4-1/2	.4857	.71	207033
Universal Fits-All™ Kit Containing a 3/8" x 3/8" x 48" Hose							
1W48CUK	039961011497	Carded Kit	10 Per Master	16-1/8 X 7-1/8 X 6-7/8	.4571	N/A	011494

Fluidmaster®, Inc. at 30800 Rancho Viejo Road, San Juan Capistrano, CA 92675 (949) 728-2000, Fax (949) 728-2205.
Red/Green color arrangement is a registered trademark of Fluidmaster, Inc.
© 2010 Fluidmaster, Inc. ® Registered trademark of Fluidmaster, Inc.
FM91224 11/10

FLUIDMASTER® QUALITY BRAND